Parts Manual

Cat.# 90-8M0145604

Revised 09-20-2020

TABLE OF CONTENTS

Cat.# 90-8M0145604

Service/Support Material 1
Top Cowl 3
Decals 5
Accent Panel 7
Lower Cowl 9
Flywheel 13
Electrical 15
Ignition 19
Starter Motor 21
Alternator Mounting/Belt 23
Shift System Mechanical 25
Oil System 27
Fuel System 31
Fuel Supply Module 33
Fuel Filter with WIF- Boat Mounted 35
Intake System Design I 37
Intake System Design II 39
Cooling System 41
Adapter Plate 45
Cylinder Block 47
Cylinder Head and Camshaft 51
Camshaft Cover 55
Crankshaft, Pistons and Connecting Rods 57
Exhaust 59
Swivel Bracket and Steering Arm 61
Power Trim/Transom Assembly 63
Power Trim Components Plastic Motor Housing 65
Driveshaft Housing 67
Gear Housing, Driveshaft - 4.80 Torpedo 69
Gear Housing, Prop Shaft - Standard Rotation, 4.80 Torpedo 73
Gear Housing, Driveshaft - 5.44 Torpedo 77
Gear Housing, Prop Shaft - Standard Rotation, 5.44 Torpedo 81
Gear Housing, Prop Shaft - Counter Rotation, 5.44 Torpedo 85
Gear Housing, Driveshaft, Torque Master 89
Gear Housing Prop Shaft-Standard Rotation,Torque Master 93
Driveshaft Extension Kits 97
Accessories 99
Tools 103

TABLE OF CONTENTS

Maintenance Kits 105

Service/Support Material

Cat.# 90-8M0145604

Service/Support Material

Ref #	Part Class	Part Number	Description	Comments	Qty	Note
-	0090	8M0145604	PARTS MANUAL 200/225/250/300 4.6L V8 4 Stroke Pro XS		1	
-					1	
-	0090	8M0145934	INSTALLATION MANUAL V6/V8 CMS		1	
-	0090	8M0145541	OPERATION MANUAL V6/V8 CMS Mechanical		1	
-	0090	8M0145542	OPERATION MANUAL V6/V8 CMS DTS		1	
-	0090	8M0146617	SERVICE MANUAL Diagnostic		1	
-		NSS	NOT SOLD SEPARATE DECAL, EPA	(Contact Mercury Marine Warranty Administration for Replacement-Service Bulletin 2009-18)	1	

Top Cowl

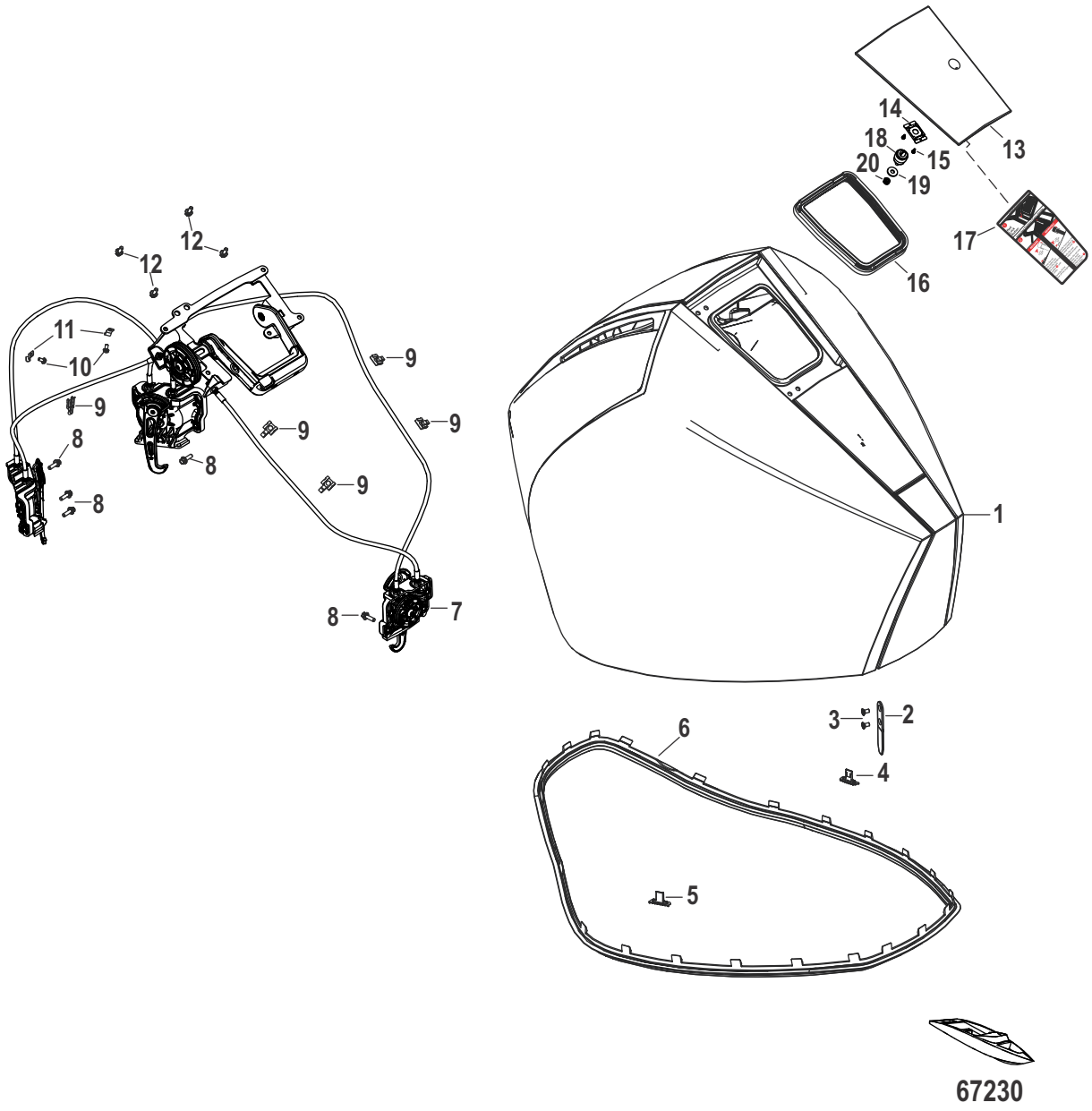

Cat.# 90-8M0145604

Top Cowl

Ref #	Part Class	Part Number	Description	Comments	Qty	Note
1	0100	8M0142173	TOP COWL ASSEMBLY Decaled without Horsepower		1	
2	0000	8M0142904	ALIGNMENT LEG		4	
3		NSS	NOT SOLD SEPARATE SCREW		8	
4	0000	8M0142916	BUMPER Port		1	
5	0000	8M0142915	BUMPER Starboard		1	
6	0000	8M0142906	SEAL Top Cowl		1	
7	0000	8M0142242	COWL LATCH ASSEMBLY		1	
8	0010	8M0103806	SCREW (M6 x 20 MM) Stainless Steel		10	
9	0054	8M0142903	CLIP		7	
10	0010	8M0142955	SCREW (M5 x 0.8)		2	
11	0054	8M0142954	CLIP		2	
12	0010	88552514	SCREW (M6 x 14 MM) Stainless Steel		6	
13	0100	8M0142238	DOOR ASSEMBLY Black		1	
14	0000	8M0142913	KEEPER ASSEMBLY		1	
15		NSS	NOT SOLD SEPARATE SCREW		2	
16	0025	8M0142908	SEAL Door		1	
17	0037	8M0148533	DECAL Latch Position		1	
18	0000	8M0142907	LOCK PUSH		1	
19	0015	8M0142914	SHIM LATCH		1	
20	0011	401386	NUT (M6) Stainless Steel		1	

PROXS
PROXS
MERCURY
MERCURY
MERCURY
1
2

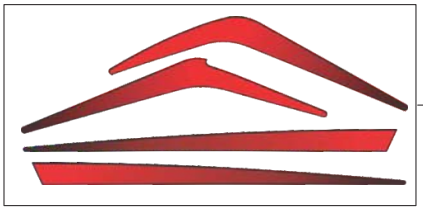
3

200
200
200
PRO
4

200
PRO
2
MERCURY
5

225
225
225
PRO
6

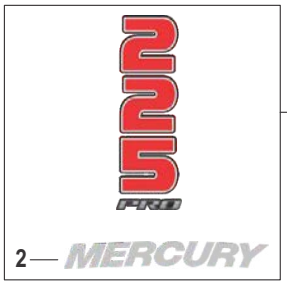
225
PRO
2
MERCURY
7

250
250
250
PRO
8

250
PRO
2
MERCURY
9

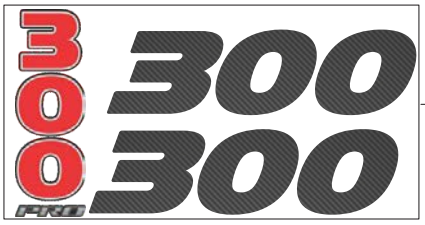
300
300
300
PRO
10

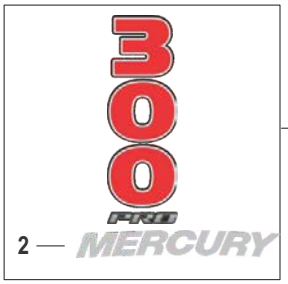
300
PRO
2
MERCURY
11

12

13

67005

Cat.# 90-8M0145604

Decals

Ref #	Part Class	Part Number	Description	Comments	Qty	Note
1	0037	8M0142186	DECAL SET	Top Cowl	1	
2	0037	8M0153042	DECAL Mercury, Silver		1	
3	0037	8M0142187	DECAL SET Pro XS	Lower Cowl	1	
4	0037	8M0142199	DECAL SET 200 HP	Does Not Include Mercury Decal	1	
5	0037	8M0145996	DECAL 200 HP		1	
6	0037	8M0142200	DECAL SET 225 HP	Does Not Include Mercury Decal	1	
7	0037	8M0145997	DECAL 225 HP		1	
8	0037	8M0142201	DECAL SET 250 HP	Does Not Include Mercury Decal	1	
9	0037	8M0145998	DECAL 250 HP		1	
10	0037	8M0142202	DECAL SET 300 HP	Does Not Include Mercury Decal	1	
11	0037	8M0145999	DECAL 300 HP		1	
12	0037	8M0085373	DECAL M-Icon, 60mm Red	Front	1	
13	0037	8M0043699	DECAL M-Icon, 66mm Red	Rear	1	

Accent Panel

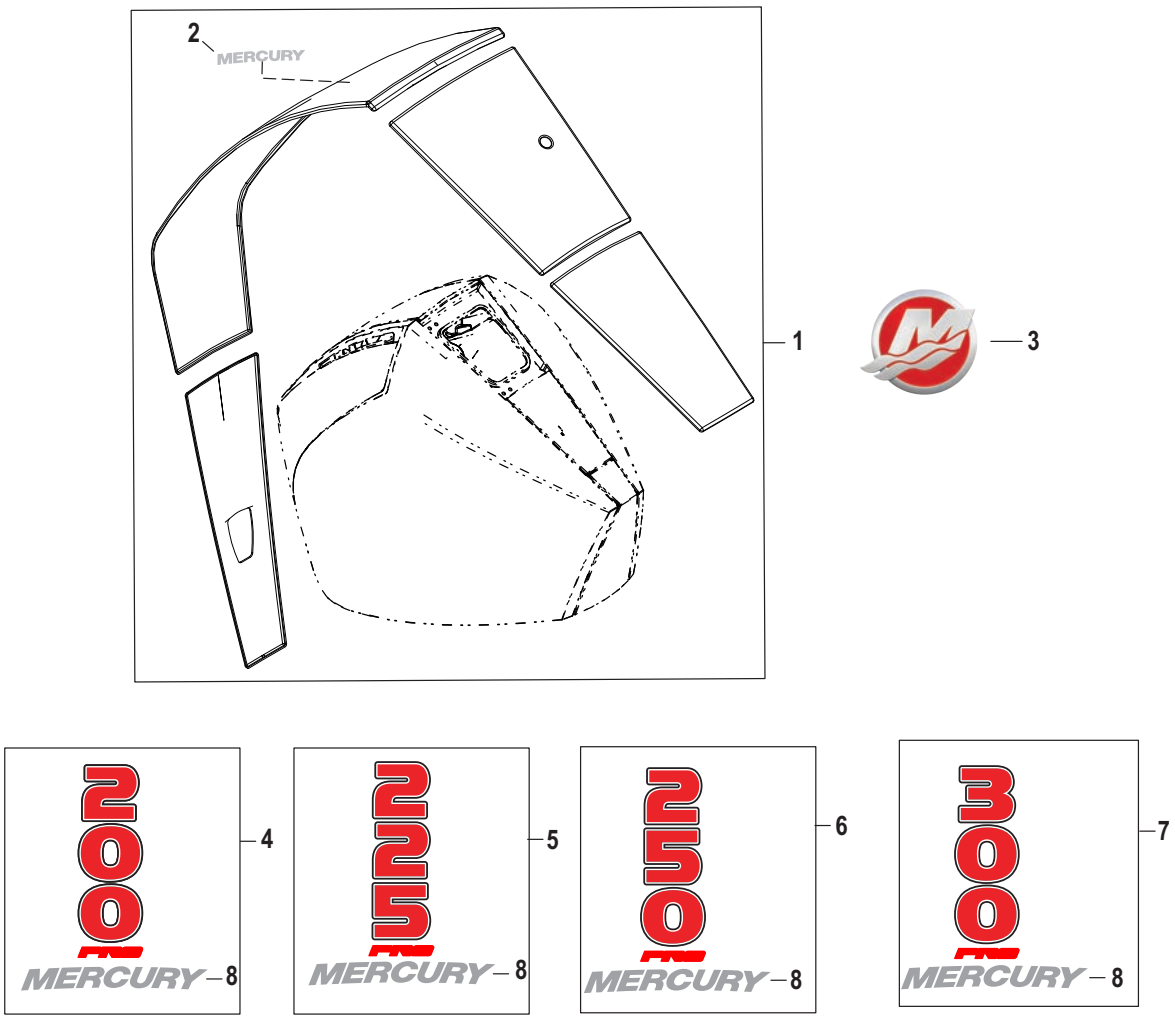

67224

Cat.# 90-8M0145604

Accent Panel

Ref #	Part Class	Part Number	Description	Comments	Qty	Note
1	0100	8M0142209	ACCENT COWL ASSEMBLY Pro Black		1	
2	0037	8M0147920	DECAL Mercury, Silver		1	
3	0037	8M0043699	DECAL M-Icon, 66mm Red		1	
4	0037	8M0145996	DECAL 200 HP		1	
5	0037	8M0145997	DECAL 225 HP		1	
6	0037	8M0145998	DECAL 250 HP		1	
7	0037	8M0145999	DECAL 300 HP		1	
8	0037	8M0153042	DECAL Mercury, Silver		1	

Lower Cowl

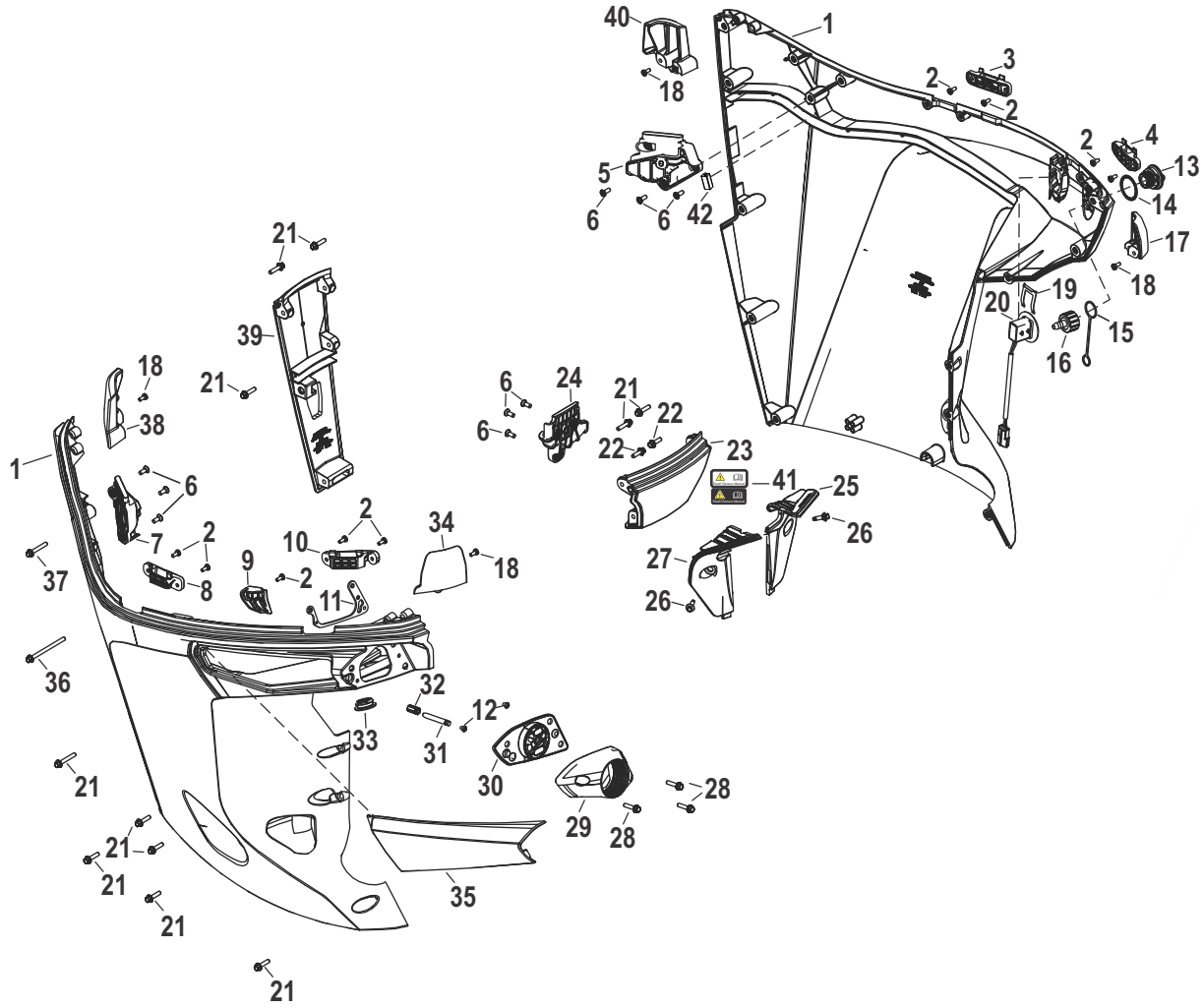
40
1
18
3
2
2
2
4
13
5
14
6
6
42
17
21
18
39
20
19
15
16
18
21
6
24
21
22
38
6
22
23
1
6
41
25
2
34
26
7
2
10
18
27
37
9
2
8
11
26
36
32
12
33
31
30
21
28
29
28
21
21
35
21
21
66952

Cat.# 90-8M0145604

Lower Cowl

Ref #	Part Class	Part Number	Description	Comments	Qty	Note
1	0100	8M0142219	LOWER COWL ASSEMBLY Port and Starboard		1	
2	0010	8M0142918	SCREW (M5 x 12)		9	
3	0000	8M0142923	RETAINER Rear, Port		1	
4	0000	8M0142922	RETAINER Front, Port		1	
5	0000	8M0142919	STRIKER ASSEMBLY Port		1	
6	0010	8M0142921	SCREW (M6 X 16)		9	
7	0000	8M0142925	STRIKER ASSEMBLY Starboard		1	
8	0000	8M0142930	RETAINER Rear, Starboard		1	
9	0000	8M0142928	BLOCK		1	
10	0000	8M0142929	RETAINER Front, Starboard		1	
11	0000	8M0142946	PLATE		1	
12	0010	8M0047718	SCREW (M5 X 8MM)		2	
13	0022	888958001	PLUG Flush Port		1	
14	0000	8M0047301	SEAL Flush Plug Pocket		1	
15	0000	889823001	TETHER Flush Plug		1	
16	0022	885361A01	FITTING ASSEMBLY Flush		1	
17	0000	8M0142945	GUIDE Front, Port		1	
18	0010	8M0142918	SCREW (M5 x 12)		4	
19	0000	8M0032848	RETAINER Switch		1	
20	0087	8M0037225	TRIM SWITCH Round Bezel		1	
21	0010	8M0022324	SCREW (M6 x 25 MM)		11	
22	0010	8M0073002	SCREW (M6 X 20), Hex Flg		2	
23	0100	8M0142229	LOWER FRONT COWL ASSEMBLY Black		1	
24	0000	8M0142932	STRIKER ASSEMBLY Front		1	
25	0100	8M0142924	COVER Port		1	
26	0010	892073002	SHOULDER SCREW (M6)		2	
27	0100	8M0142931	COVER Starboard		1	
28	0010	8M0075735	SCREW (M6 X 30) Hex Flg		3	
29	0000	8M0142949	ADAPTER		1	
30	0000	8M0142948	GROMMET Mechanical		1	
30	0000	8M0142950	GROMMET DTS		1	
30	0025	8M0146953	GROMMET Large Hole, Mechanical		1	
30	0025	8M0146954	GROMMET Large Hole, DTS CMS		1	
31	0017	8M0146710	PIN Rigging Door		1	
32	0023	8M0142927	BUSHING		1	
33	0025	8M0142947	GROMMET Trim Sensor		1	
34	0000	8M0142944	GUIDE Front, Starboard		1	
35	0100	8M0142582	RIGGING DOOR Black		1	
36	0010	8M0071078	SCREW (M6 X 85) Hex Flg		1	
37	0010	8M0142933	SCREW (M6 x 40)		1	
38	0000	8M0142942	GUIDE Rear, Starboard		1	
39	0100	8M0142224	LOWER REAR COWL ASSEMBLY Black		1	
40	0000	8M0142943	GUIDE Rear, Port		1	
41	0037	8M0142577	DECAL Read Manual, Clear		1	

Lower Cowl

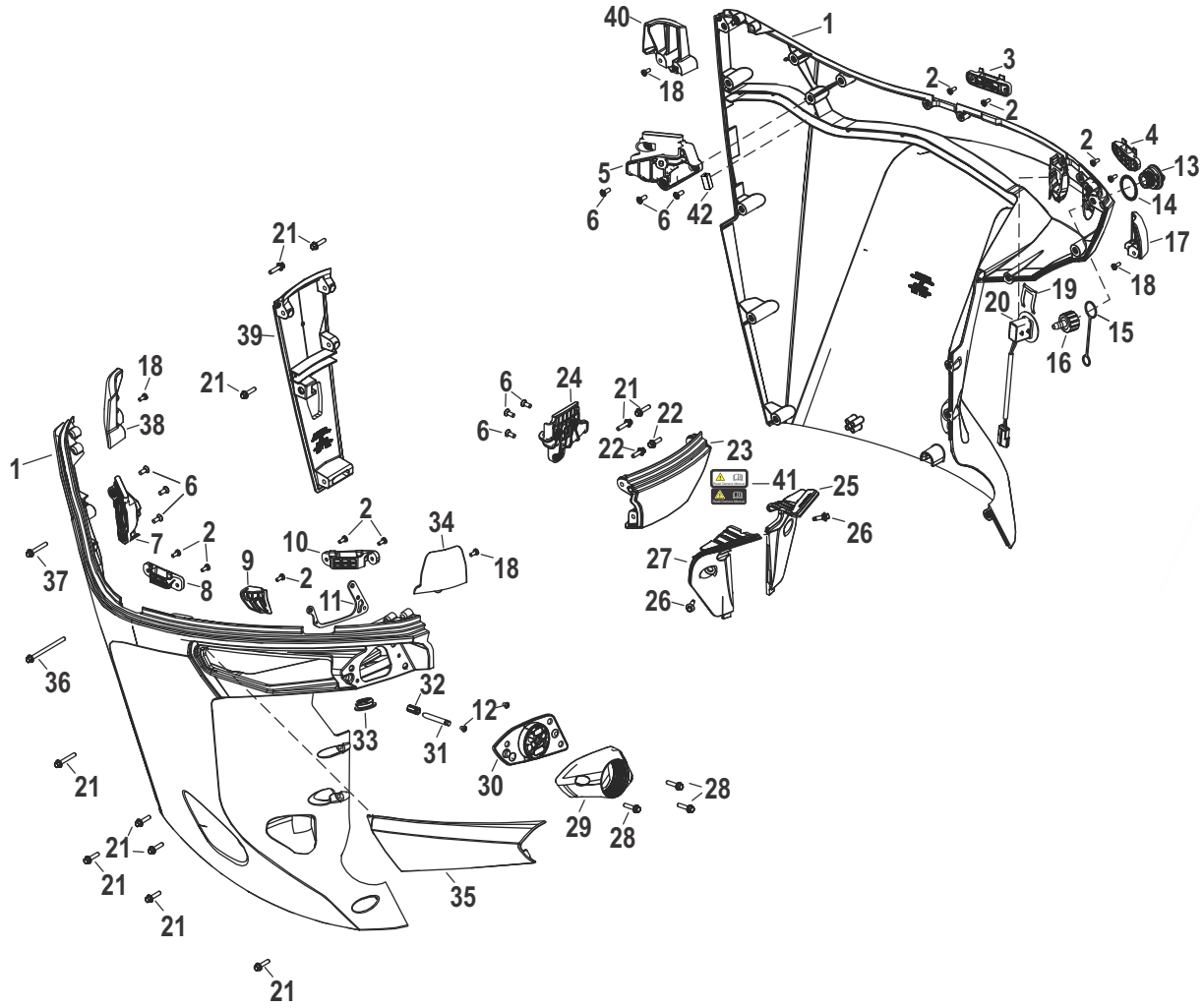
40
1
18
3
2
2
2
4
13
5
14
6
6
42
17
21
18
39
20
19
15
16
18
21
6
24
21
22
38
6
22
23
1
6
41
25
2
34
26
7
2
10
18
27
37
9
2
8
11
26
36
32
12
33
31
30
21
28
29
28
21
21
35
21
21
66952

Cat.# 90-8M0145604

Lower Cowl

Ref #	Part Class	Part Number	Description	Comments	Qty	Note
41	0037	8M0142371	DECAL Read Manual, Black		1	
42	0023	8M0149605	SLEEVE Edge Protector		1	
-	0037	8M0142187	DECAL SET Pro XS	Lower Chaps	1	

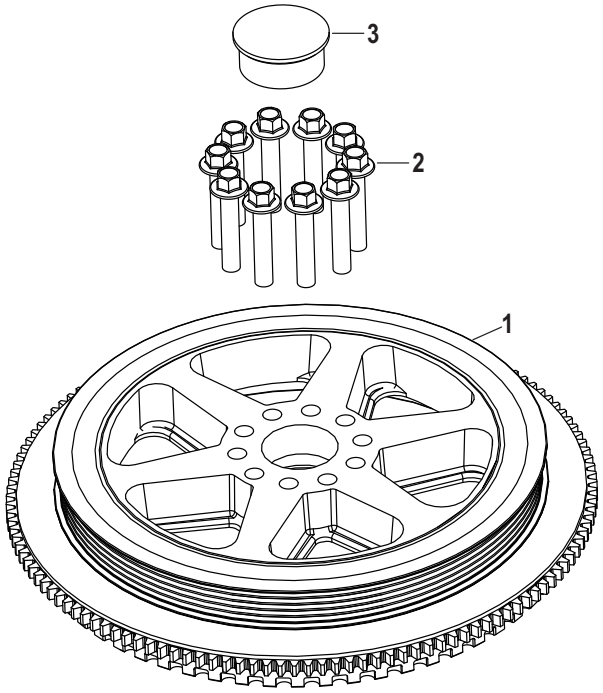

66981

Cat.# 90-8M0145604

Flywheel

Ref #	Part Class	Part Number	Description	Comments	Qty	Note
1	0200	8M0142245	FLYWHEEL		1	
2	0010	8M0142384	SCREW (M8 x 42) HX FLG HEAD		10	
3	0019	8M0142389	PLUG Flywheel		1	

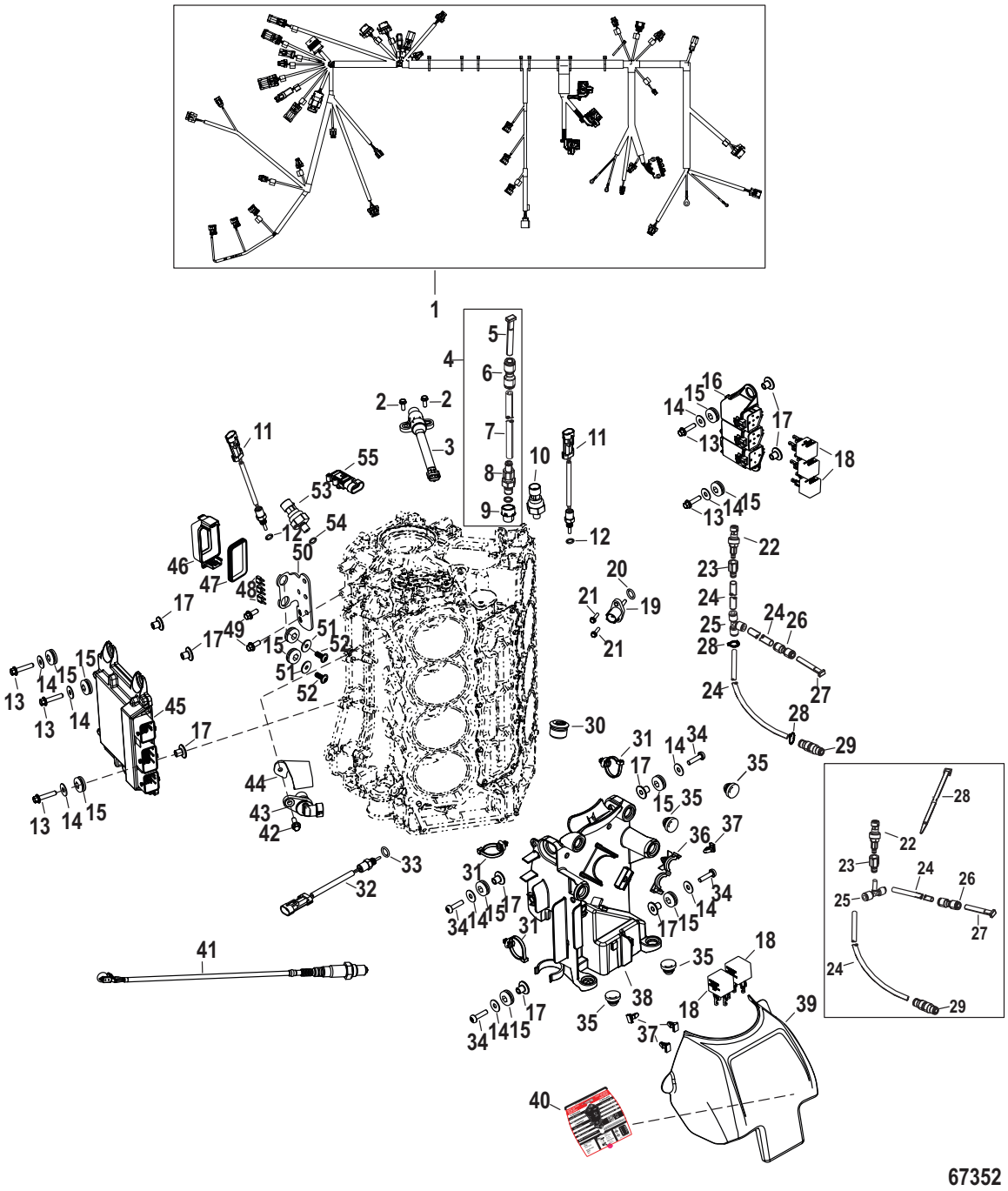
67352

Cat.# 90-8M0145604

Electrical

Ref #	Part Class	Part Number	Description	Comments	Qty	Note
1	0084	8M0142259	ENGINE HARNESS Mechanical		1	
1	0084	8M0142260	ENGINE HARNESS DTS		1	
2	0010	40011106	SCREW (M5 x 13) Stainless Steel		2	
3	0000	8M0082988	SENSOR Crankshaft Position		1	
4	0000	8M0145165	BLOCK WATER PRESSURE KIT Analog	Mechanical	1	
5	0022	859732	PLUG	Mechanical	1	
6	0022	859747	COUPLER	Mechanical	1	
7	0032	85978571	TUBING (52.00 Inches Bulk)	Mechanical	1	
8	0022	896094A01	FITTING ASSEMBLY	Mechanical	1	
9	0000	8M0146147	CONNECTOR CAP 3 Pin	Mechanical	1	
10	0071	8M0142696	SENSOR Pressure	Block Pressure, DTS	1	
11	0000	8M0142542	SENSOR Temperature		2	
12	0025	896699	O-RING (1.78 mm x .08 mm)		2	
13	0010	8M0103807	SCREW (M6 x 25 MM) Stainless Steel		5	
17	0012	65567	WASHER (.265 x .750 x .048) Stainless Steel		9	
15	0025	834985	GROMMET		11	
16	0000	8M0142684	RELAY HOUSING		1	
17	0023	856954	BUSHING		9	
18	0000	8M0057697	CUBE RELAY		5	
19	0000	891663001	SENSOR ASSEMBLY Temperature	Intake Air	1	
20	0027	8M0142578	GASKET MAT Sensor		1	
21	0010	895054	SCREW (M4 x 16 MM)		2	
22	0000	881879T11	SENSOR Pressure (0 - 100 PSI)	Pitot	1	
23	0022	892403	FITTING		1	
24	0032	85944975	TUBING (72.00 Inches Bulk)	Design I	3	
24	0032	85944975	TUBING (72.00 Inches Bulk)	Design II	2	
25	0022	875207	TEE Fitting	Design I	1	
25	0022	8M0157114	FITTING TEE 4 MM	Design II	1	
26	0022	859747	COUPLER		1	
27	0022	859732	PLUG		1	
28	0054	816311T	TIE STRAP (8.00 Inches)	Design I	2	
28	0054	816311T	TIE STRAP (8.00 Inches)	Design II	1	
29	0022	859448T	FITTING		1	
30	0019	8M0087451	PLUG (18MM)		1	
31	0054	899145	CLIP Tie Strap		3	
32	0000	8M0142689	SENSOR Temperature	Exhaust	1	
33	0025	896699	O-RING (1.78 mm x .08 mm)		1	
34	0010	8M0142686	SCREW (M6 x 25)		4	
35	0025	8M0096302	GROMMET		4	
36	0054	858954	CLIP (.625)		1	
37	0054	879962	CLIP		4	
38	0000	8M0142685	PLATE Electrical		1	
39	0000	8M0142479	COVER Electrical Plate		1	
40	0037	8M0148538	DECAL Maintenance Schedule		1	

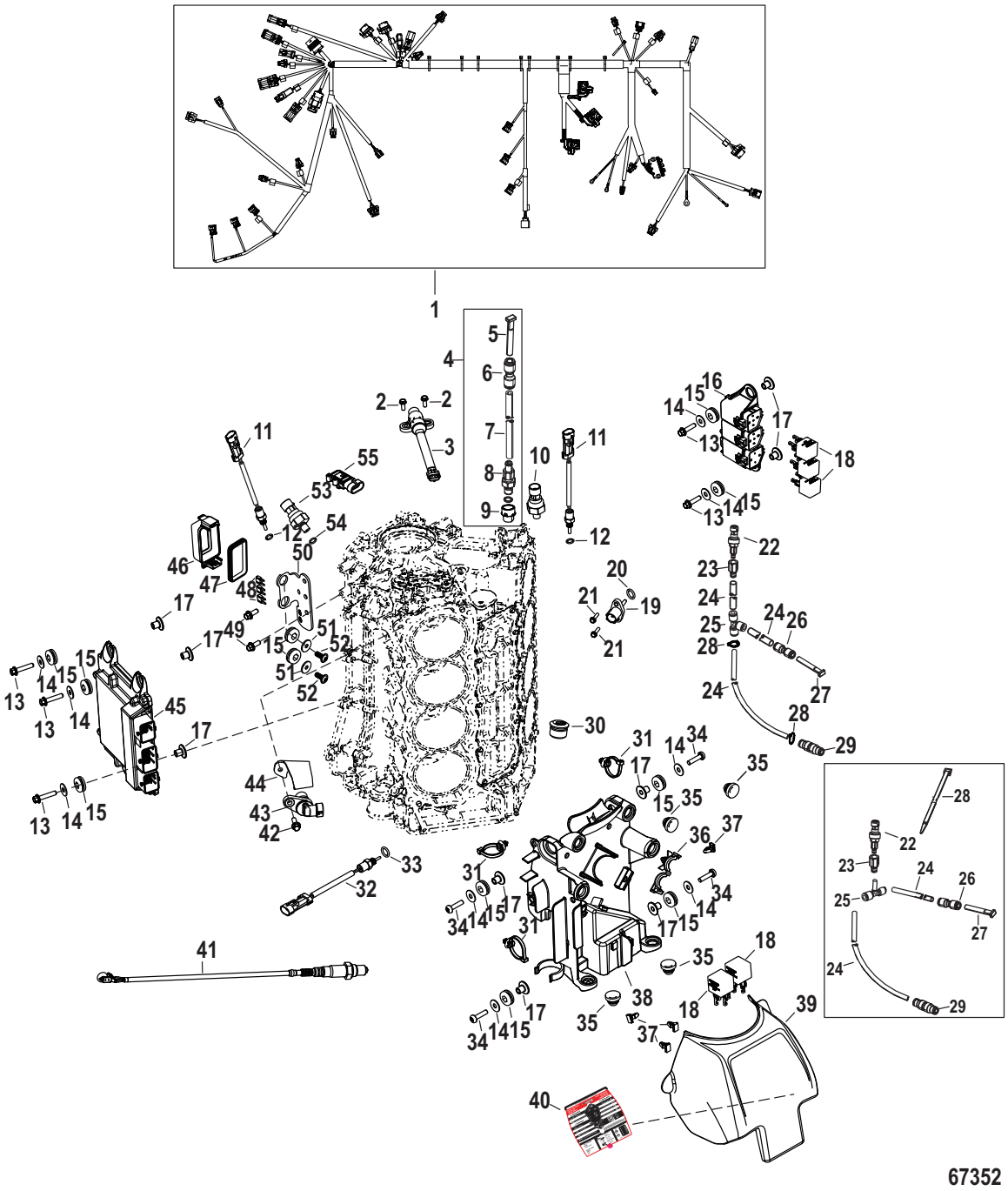
67352

Cat.# 90-8M0145604

Electrical

Ref #	Part Class	Part Number	Description	Comments	Qty	Note
41	0000	8M0142695	SENSOR Oxygen		1	
42	0010	8M0103806	SCREW (M6 x 20 MM) Stainless Steel		1	
43	0000	8M0011987	SENSOR	Cam Position	1	
44	0000	8M0142691	BRACKET Cam Sensor		1	
45	0078	8M0142653	PCM 200 V8 PROXS MECH		1	
45	0078	8M0142652	PCM 200 V8 PROXS DTS		1	
45	0078	8M0142656	PCM 225 V8 PROXS MECH		1	
45	0078	8M0142655	PCM 225 V8 PROXS DTS		1	
45	0078	8M0142783	PCM 250 V8 PROXS MECH		1	
45	0078	8M0142756	PCM 250 V8 PROXS DTS		1	
45	0078	8M0142963	PCM 300 V8 PROXS MECH		1	
45	0078	8M0142951	PCM 300 V8 PROXS DTS		1	
46	0000	8M0147858	COVER Fuse Box		1	
47	0000	8M0147903	SEAL Fuse Box		1	
48	0088	8329692	FUSE Mini - Gray - 2 Ampere		1	
48	0088	83296910	FUSE Mini - Red - 10 Ampere		1	
48	0088	832969T20	FUSE Mini - Yellow - 20 Ampere		4	
49	0010	8M0103805	SCREW (M6 x 16MM) Stainless Steel		2	
50	0000	8M0142455	BRACKET Fuse Box		1	
51	0012	42118	WASHER		2	
52	0010	878609	SCREW (#10-16 x .600)		2	
53	0071	8M0142688	SENSOR Pressure	Oil	1	
54	0025	896699	O-RING (1.78 mm x .08 mm)		1	
55	0000	8M0142690	SENSOR MAP		1	

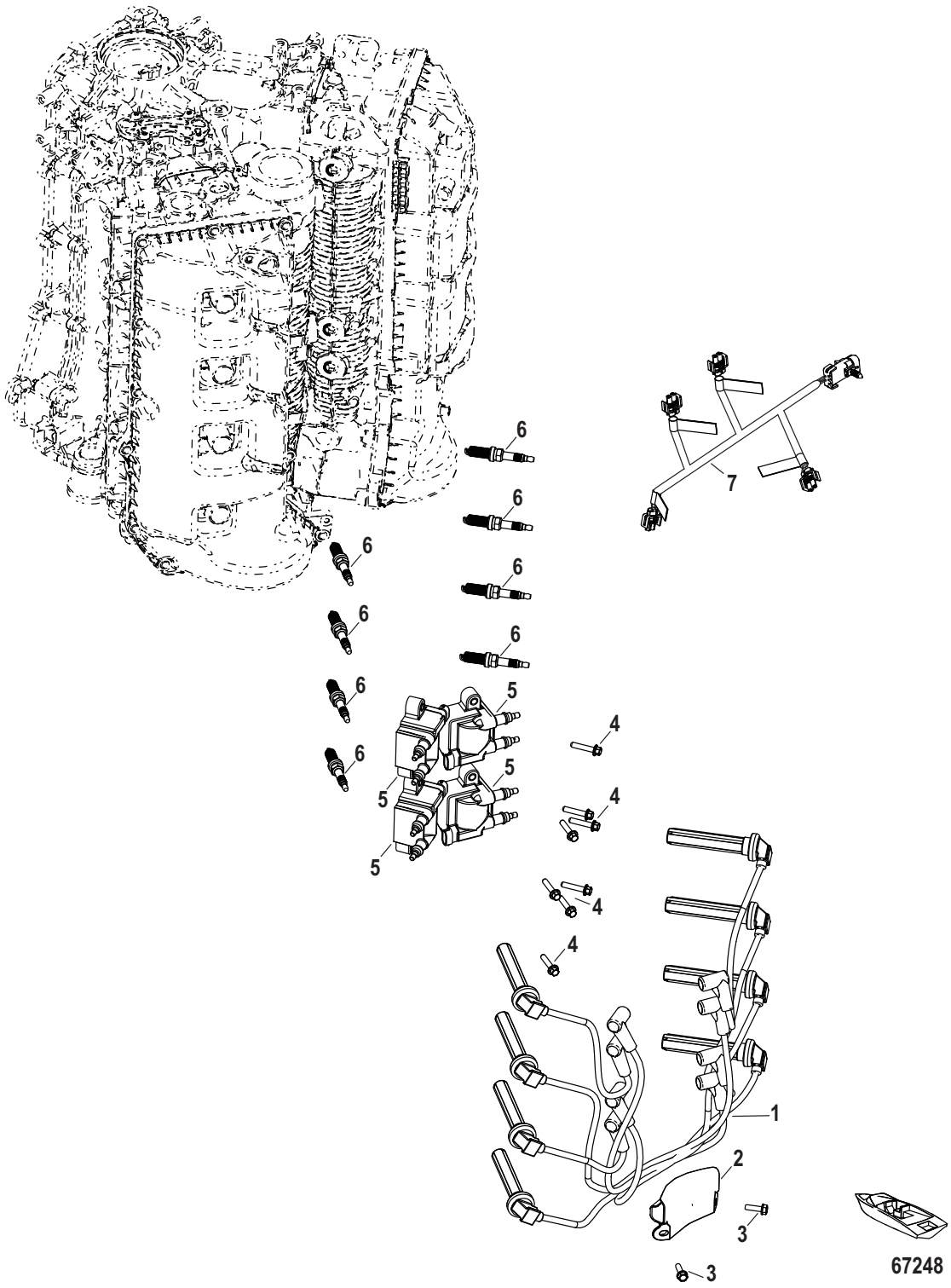
6
6
6
6
6
6
6
5
5
5
4
4
4
4
7
1
2
3
3
67248

Cat.# 90-8M0145604

Ignition

Ref #	Part Class	Part Number	Description	Comments	Qty	Note
1	0084	8M0142697	SPARK PLUG WIRES		1	
2	0000	8M0142671	GUIDE		1	
3	0010	897445501	SCREW (M6 x 20 MM)		2	
4	0010	8M0103808	SCREW (M6 x 30 MM) Stainless Steel		8	
5	0300	8M0044991	IGNITION COIL Ignition Dual Output		4	
6	0033	8M0135348	SPARK PLUGS		8	
7	0084	8M0142694	WIRE HARNESS Coil Adapter		1	

Starter Motor

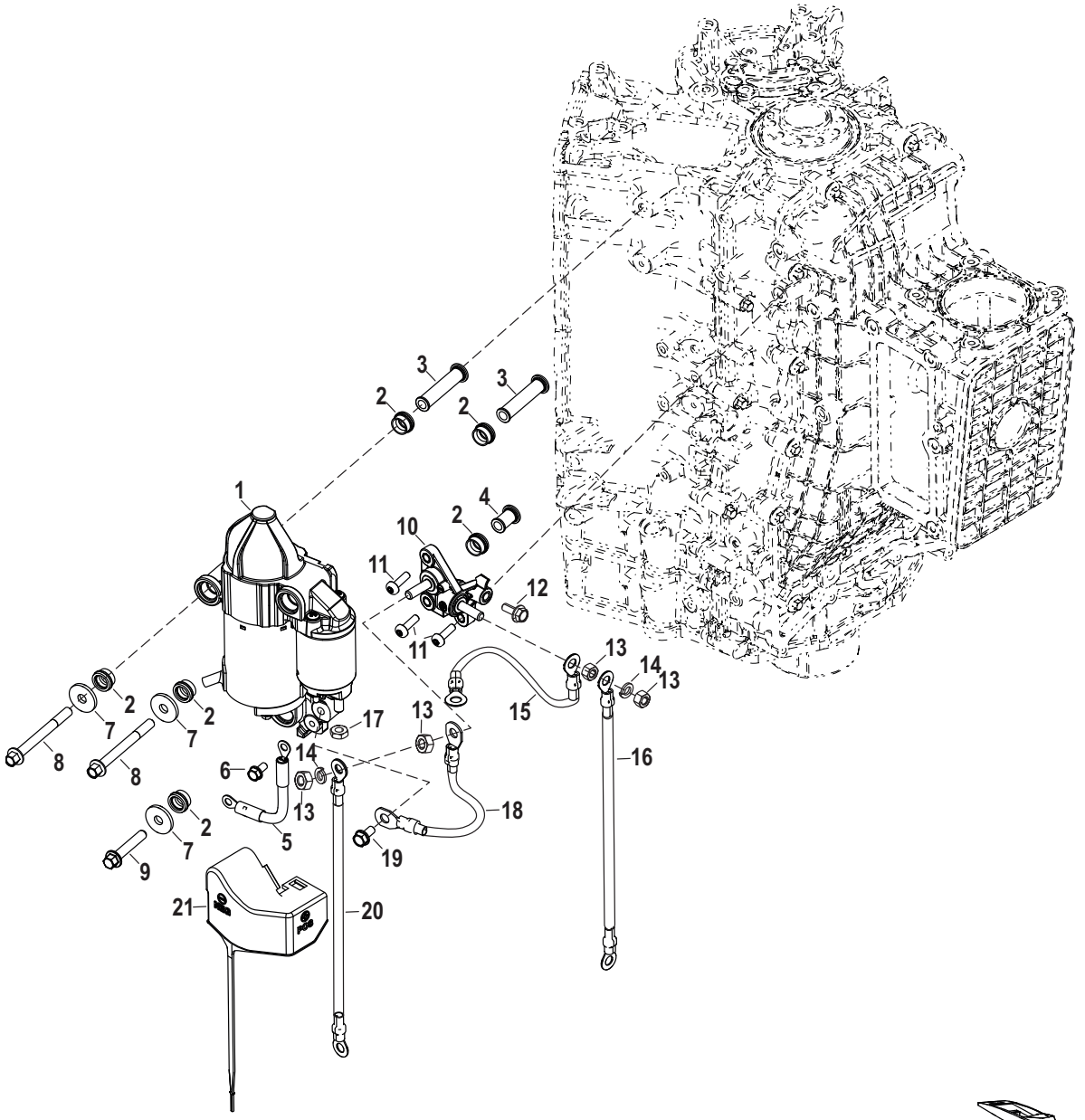

66986

Cat.# 90-8M0145604

Starter Motor

Ref #	Part Class	Part Number	Description	Comments	Qty	Note
1	0050	8M0142679	STARTER		1	
2	0023	8M0070367	MOUNT - TUBULAR 8MM		6	
3	0023	8M0070369	SPACER (8.3 I.D. X 11.8 O.D.)		2	
4	0023	8M0070368	SPACER (8.3 I.D. X 11.8 O.D.)		1	
5	0084	8M0056666	GROUND STRAP Starter		1	
6	0010	40011126	SCREW (M6 x 13) Stainless Steel		1	
7	0012	43430	WASHER		3	
8	0010	8M0142896	SCREW (M8 x 80)		2	
9	0010	88552645	SCREW (M8X45)		1	
10	0000	8M0142680	BRACKET HOT STUD		1	
11	0010	8M0080651	SCREW (M6 x 20)		3	
12	0010	40011145	SCREW (M8 x 10) Stainless Steel		1	
13	0011	8M0146003	NUT M8 x 1.25 Hex		4	
14	0013	400257	LOCKWASHER (M8)		2	
15	0084	8M0142681	CABLE ASSEMBLY Starter-Postitive		1	
16	0084	88439A46	CABLE ASSEMBLY Battery - Positive		1	
17	0011	401388	NUT (M8) Stainless Steel		1	
18	0084	8M0146902	CABLE ASSEMBLY Starter-Negative		1	
19	0010	40011148	SCREW (M8 x 20)		1	
20	0084	88439A26	CABLE ASSEMBLY Battery - Negative		1	
21	0085	8M0142687	COVER Hot Stud		1	

Alternator Mounting/Belt

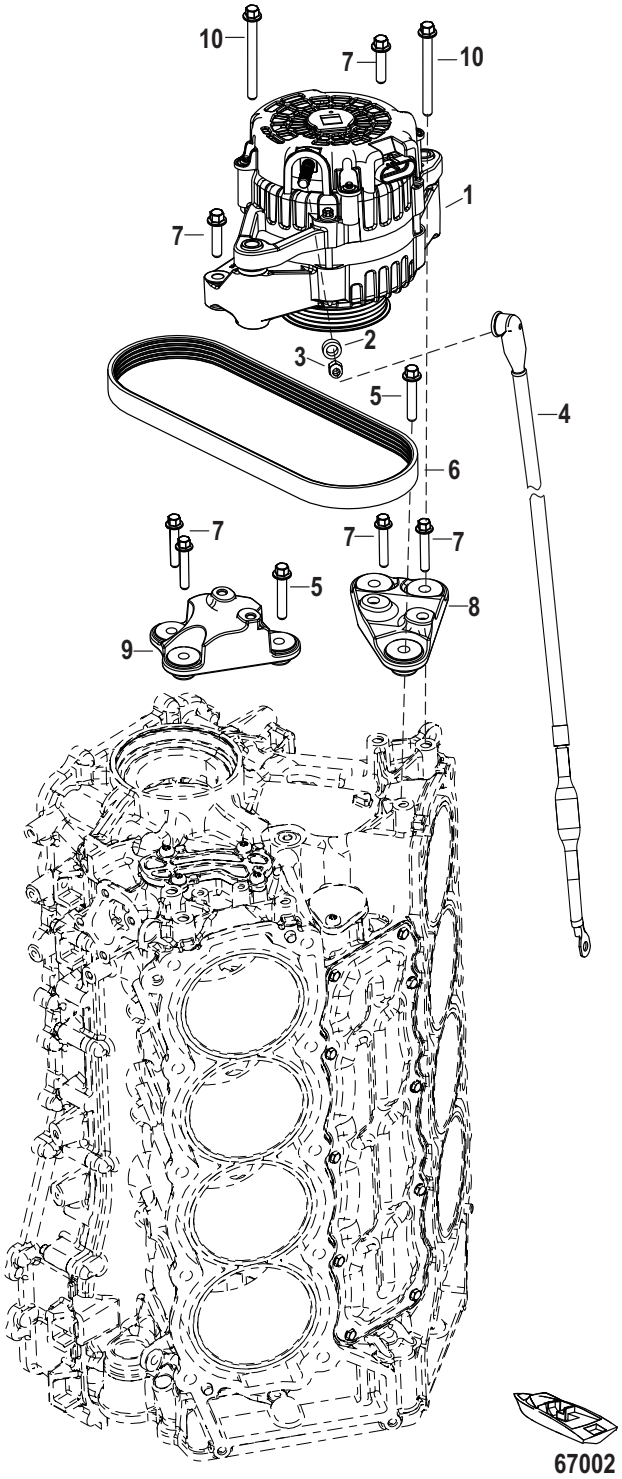

Cat.# 90-8M0145604

Alternator Mounting/Belt

Ref #	Part Class	Part Number	Description	Comments	Qty	Note
1	0000	8M0142248	ALTERNATOR 85 AMP		1	
2	0023	8M0151156	SPACER		1	
3	0011	401388	NUT (M8) Stainless Steel		1	
4	0084	8M0142675	CABLE ASSEMBLY Fusable Link		1	
5		8M0145100	SCREW M8 Hex Flange		2	
6	0057	8M0142251	BELT		1	
7	0010	8M0142460	SCREW (M8 x 45) HEX FLG		6	
8	0000	8M0142692	BRACKET Alternator	Starboard	1	
9	0000	8M0142693	BRACKET Alternator	Port	1	
10	0010	8M0142677	SCREW (M8 x 85)		2	

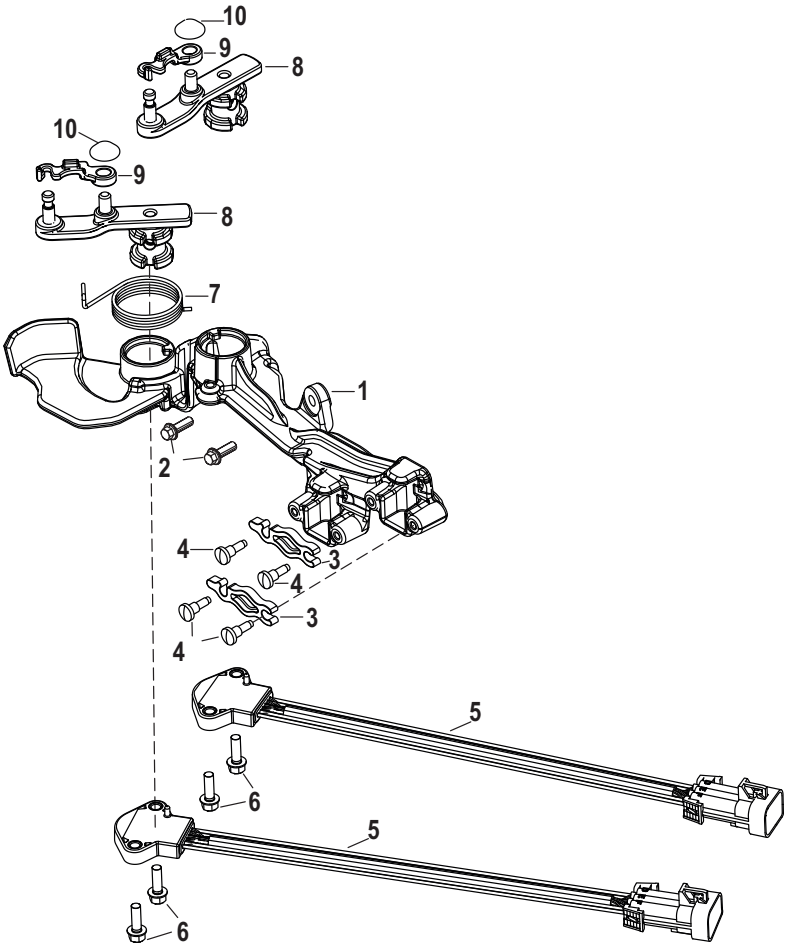

67210

Cat.# 90-8M0145604

Shift System Mechanical

Ref #	Part Class	Part Number	Description	Comments	Qty	Note
1	0000	8M0142824	BRACKET Shift Throttle		1	
2	0010	4010620	SCREW (M6 x 20) Stainless Steel		2	
3	0000	899044	LATCH		2	
4	0010	42975	DRIVE SCREW		4	
5	0084	8M0142827	HARNESS Demand Sensor		2	
6	0010	40011107	SCREW (M5 x 16) Stainless Steel		4	
7	0024	8M0142826	SPRING Throttle		1	
8	0000	8M0142828	ARM ASSEMBLY	Throttle and Shift	2	
9	0000	8M0142825	RETAINER		2	
10	0011	825677	PUSH NUT		2	

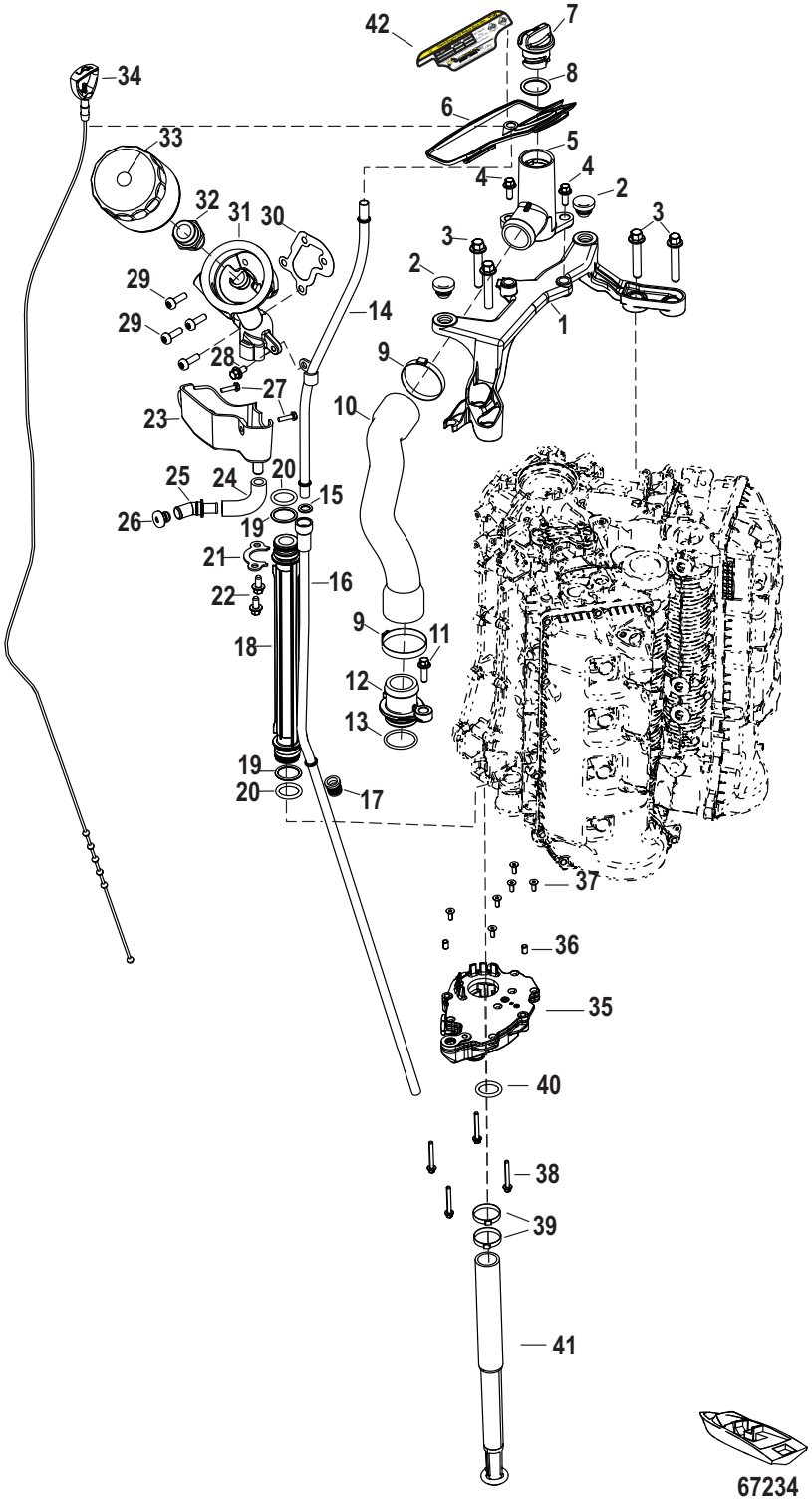
42
7
34
8
6
33
5
4
4
2
32
31
30
3
3
2
29
29
14
1
9
28
27
10
23
25
24
20
15
26
19
21
16
22
9
11
18
12
13
19
20
17
37
36
35
40
38
39
41
67234

Cat.# 90-8M0145604

Oil System

Ref #	Part Class	Part Number	Description	Comments	Qty	Note
1	0000	8M0142467	BRACKET Oil Fill		1	
2	0025	8M0096302	GROMMET		2	
3	0010	8M0142460	SCREW (M8 x 45) HEX FLG		4	
4	0010	8M0103805	SCREW (M6 x 16MM) Stainless Steel		2	
5	0000	8M0142478	NECK Oil Fill		1	
6	0025	8M0142470	GROMMET		1	
7	0036	8M0142290	CAP Oil		1	
8	0025	90196	O-RING (.921 x .139)		1	
9	0054	8M6001459	CLAMP (45.5)		2	
10	0032	8M0142469	HOSE Oil Fill		1	
11	0010	8M0103806	SCREW (M6 x 20 MM) Stainless Steel		1	
12	0022	8M0142468	TUBE Oil Fill		1	
13	0025	8M0044601	O-RING		1	[1]
14	0000	8M0142480	TUBE Dipstick- Upper		1	
15	0025	8M0142481	O-RING (0.362 x 0.103)		1	
16	0000	8M0142463	TUBE Dipstick		1	
17	0025	8M0142471	GROMMET (0.375 IN)		1	
18	0032	8M0142449	TUBE Oil Pump to Filter		1	
19	0025	8M0142452	O-RING (70 Durometer)		2	[1]
20	0025	8M0142450	O-RING (70 Durometer)		2	[1]
21	0000	8M0142484	BRACKET Oil FIlter		1	
22	0010	8M0142485	SCREW (M6) HX FLG		2	
23	0000	8M0142454	OIL DRIP TRAY		1	
24	0032	8M0142457	HOSE Drip tray		1	
25	0022	8M0142456	FITTING		1	
26	0019	8M0143229	PLUG Drip Tray		1	
27	0010	895054	SCREW (M4 x 16 MM)		2	
28	0010	8M0103804	SCREW (M6 x 12 MM) Stainless Steel		1	
29	0010	8M0080651	SCREW (M6 x 20)		4	
30	0027	8M0142482	GASKET Adapter		1	[1]
31	0000	8M0142483	ADAPTER Oil Filter		1	[1]
32	0022	8M0142453	FITTING		1	
33	0035	8M0123025	OIL FILTER		1	
34	0000	8M0142576	DIPSTICK		1	
35	0000	8M0142403	OIL PUMP ASSEMBLY		1	
36	0017	8M0142408	DOWEL Pin		2	
37	0010	8M0142407	SCREW (M6) HEX SOCKET FLAT X 16 LG		6	
38	0010	8M0142401	SCREW (M6) HX FL REDUCED HEAD		4	
39	0054	8M6000385	CLAMP (39.6 MM)		2	
40	0025	8M6001577	O-RING M6 X 46		1	[1]
41	0000	8M0142402	OIL PICK UP ASSEMBLY		1	
42	0037	8M0142570	DECAL Check Engine Oil		1	

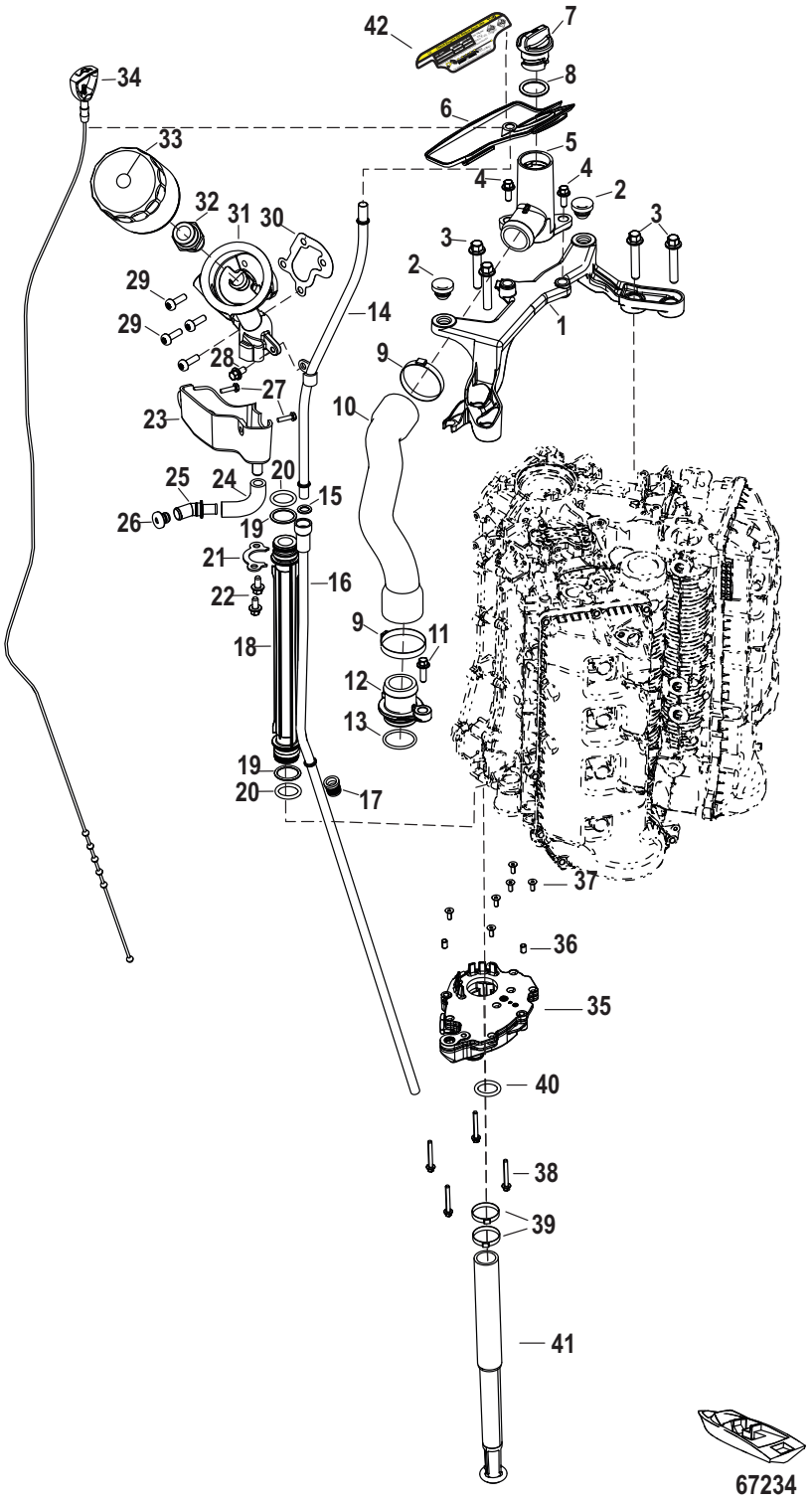
42
7
34
8
6
33
5
4
4
2
32
31
30
3
3
2
29
14
29
1
28
9
27
10
23
25
24
20
15
26
19
21
16
22
9
11
18
12
13
19
20
17
37
36
35
40
38
39
41
67234

Cat.# 90-8M0145604

Oil System

Ref #	Part Class	Part Number	Description	Comments	Qty	Note
-	0000	8M0147117	POWERHEAD GASKET SET		1	

PART NOTES:

[1] - Component of Powerhead Gasket Set 8M0149551

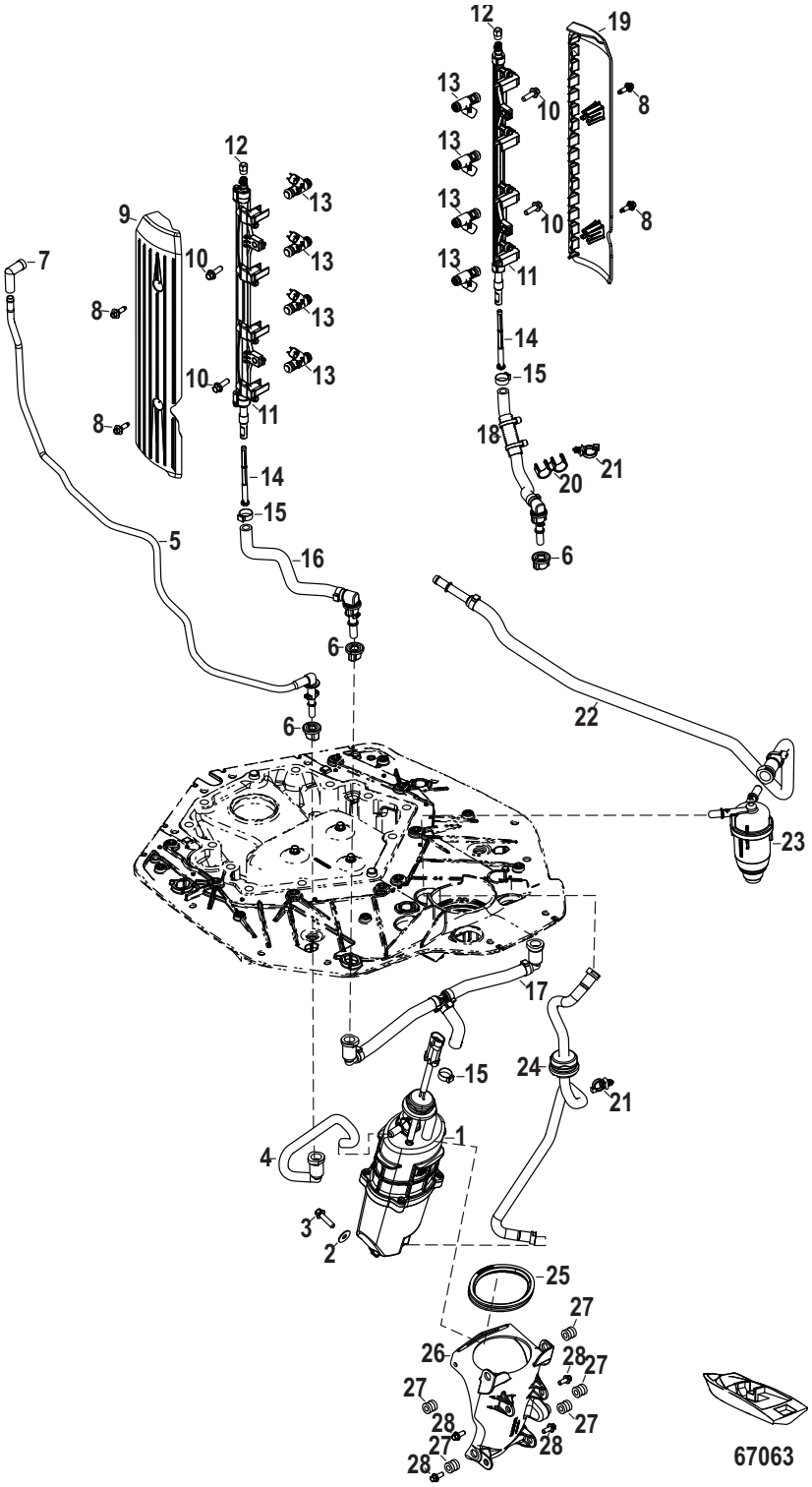
12
19
13
10
8
13
13
10
8
13
11
14
15
18
20
21
6
12
13
9
13
7
10
13
8
13
10
13
11
8
14
15
5
16
6
6
22
23
17
15
24
21
1
4
3
2
25
27
26
28
27
27
28
27
27
28
28
67063

Cat.# 90-8M0145604

Fuel System

Ref #	Part Class	Part Number	Description	Comments	Qty	Note
1	0000	8M0132732	FUEL SUPPLY MODULE		1	
2	0012	65567	WASHER (.265 x .750 x .048) Stainless Steel		1	
3	0010	8M0103807	SCREW (M6 x 25 MM) Stainless Steel		1	
4	0032	8M0142432	HOSE Intake to FSM		1	
5	0032	8M0142436	HOSE ASSEMBLY Manifold Ref Upper		1	
6	0025	884546	GROMMET		3	
7	0032	8M0093068	HOSE		1	
8	0000	8M0005773	SCREW (M6)		4	
9	0000	8M0142475	COVER Fuel Rail, Port		1	
10	0010	8M0103806	SCREW (M6 x 20 MM) Stainless Steel		4	
11	0000	8M0142434	FUEL RAIL Port		1	
11	0000	8M0142433	FUEL RAIL Starboard		1	
12	0019	8M0046566	CAP		2	
13	0000	8M0142264	FUEL INJECTOR		8	
14	0035	8M0090809	FILTER		2	
15	0054	8M0142585	CLAMP		3	
16	0032	8M0142442	HOSE ASSEMBLY FSM To Port Rail		1	
17	0032	8M0142437	HOSE ASSEMBLY FSM To Fuel Rail		1	
18	0032	8M0142444	HOSE ASSEMBLY FSM To Starboard Rail		1	
19	0000	8M0142476	COVER Fuel Rail, Starboard		1	
20	0054	8M0142445	CLIP		1	
21	0054	899145	CLIP Tie Strap		2	
22	0032	8M0142446	HOSE ASSEMBLY Cowl to FSM		1	
23	0035	8M0106635	FUEL FILTER		1	
24	0032	8M0142430	HOSE Fuel Filter to FSM		1	
25	0000	8M0037209	GROMMET FSM Retainer		1	
26	0000	8M0142722	BRACKET FSM		1	
27	0025	8M0142724	GROMMET		5	
28	0010	8M0103805	SCREW (M6 x 16MM) Stainless Steel		4	

Fuel Supply Module

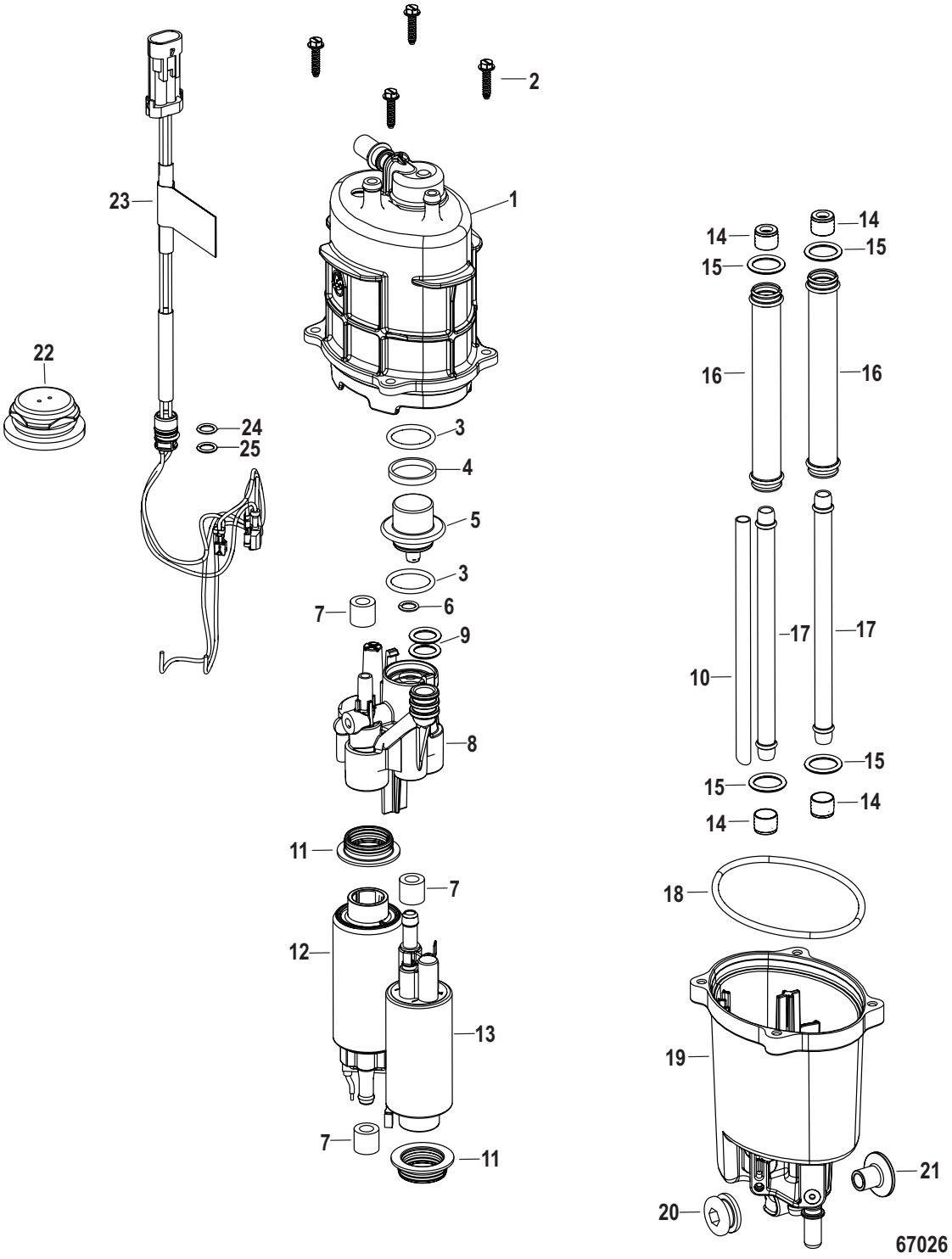

Cat.# 90-8M0145604

Fuel Supply Module

Ref #	Part Class	Part Number	Description	Comments	Qty	Note
-	0000	8M0132732	FUEL SUPPLY MODULE		1	
1	0000	8M0053726	FSM TOP HOUSING		1	
2	0010	8M0053756	SCREW Plastite W/ HX WSR HD		4	
3		NSS	NOT SOLD SEPARATE O-Ring		2	[1]
4		NSS	NOT SOLD SEPARATE Spacer		1	[1]
5	0000	8M0053749	REGULATOR ASSEMBLY		1	
6		NSS	NOT SOLD SEPARATE O-Ring		1	[1]
7		NSS	NOT SOLD SEPARATE Seal		3	[1]
8	0036	8M0130877	FSM CAP		1	
9		NSS	NOT SOLD SEPARATE O-Ring		2	[1]
10	0032	8M0053755	TUBE Suction		1	
11		NSS	NOT SOLD SEPARATE Seal		2	[1]
12	0000	8M0103288	PUMP ASSEMBLY High Pressure		1	
13	0000	8M0103289	PUMP ASSEMBLY Low Pressure		1	
14		NSS	NOT SOLD SEPARATE Seal		4	[1]
15		NSS	NOT SOLD SEPARATE O-Ring		4	[1]
16	0032	8M0120073	TUBE Water		2	
17	0032	8M0130873	TUBE Fuel		2	
18		NSS	NOT SOLD SEPARATE Seal		1	
19	0000	8M0130878	FSM BOTTOM HOUSING		1	
20	0025	895319	GROMMET		1	
21	0023	856954	BUSHING		1	
22	0025	8M0086888	GROMMET FSM Harness Spacer		1	[1]
23	0084	8M6004776	HARNESS ASSEMBLY		1	
24		NSS	NOT SOLD SEPARATE O-Ring		1	[1]
25		NSS	NOT SOLD SEPARATE O-Ring		1	[1]
-	0000	8M0133370	FSM SEAL KIT		1	

PART NOTES:

[1] - Component of FSM Seal Kit 8M0133370

Fuel Filter with WIF- Boat Mounted

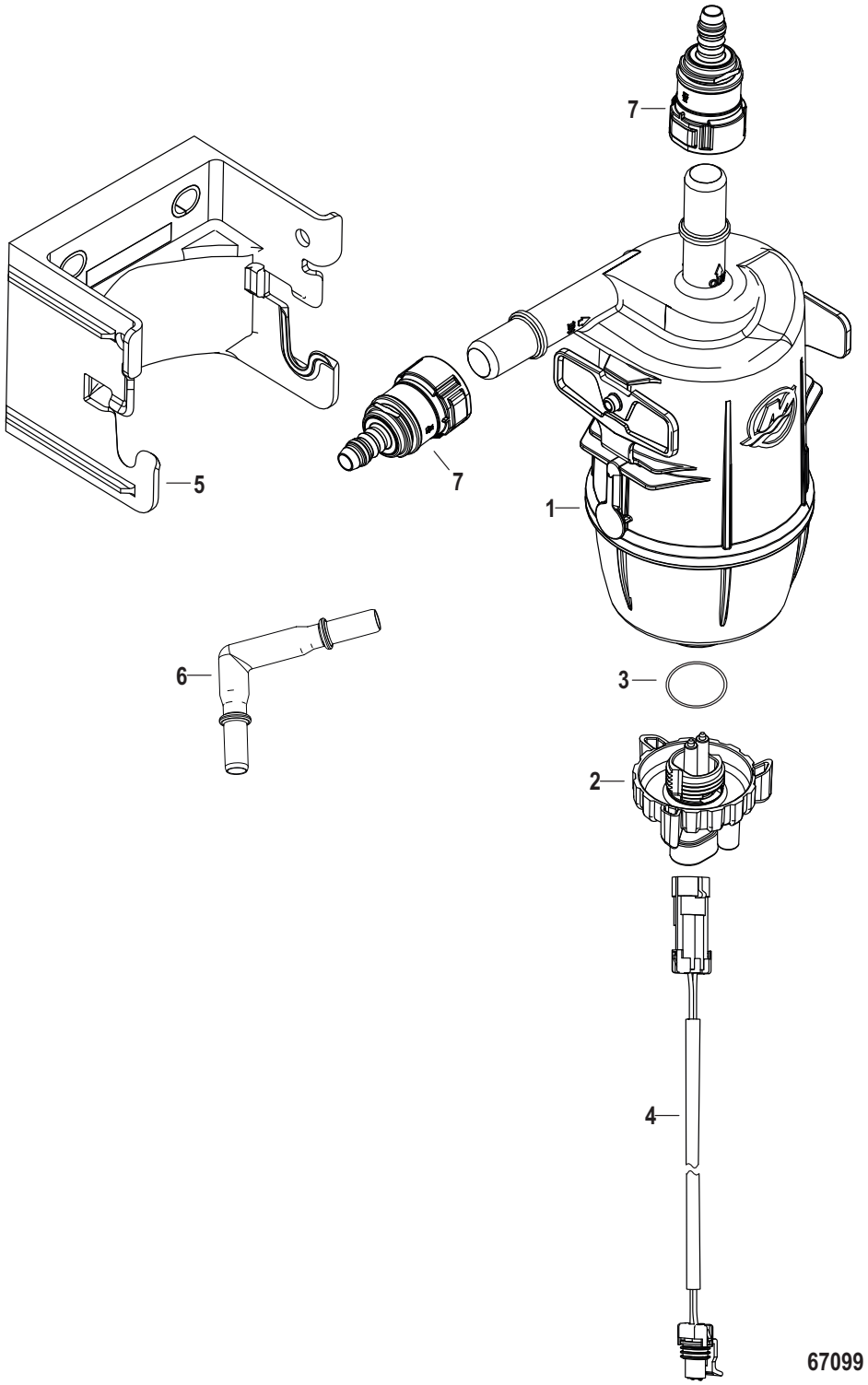

Cat.# 90-8M0145604

Fuel Filter with WIF- Boat Mounted

Ref #	Part Class	Part Number	Description	Comments	Qty	Note
-	0035	8M0135386	FUEL FILTER KIT Boat Mounted		1	
1	0035	8M0126144	FUEL FILTER		1	
2	0000	8M0142649	SENSOR WIF		1	
3	0025	8M0152436	ORING		1	
4	0084	8M0042697	HARNESS Fuel Filter Sensor Extension (144 in)		1	
5	0000	8M0152423	BRACKET Plastic Snap		1	
6	0022	8M0152433	FITTING ELBOW		1	
7	0022	8M0146934	FITTING Quick Connect	(5/8 IN to 3/8 IN HOSE CONNECTION)	2	

Intake System Design I

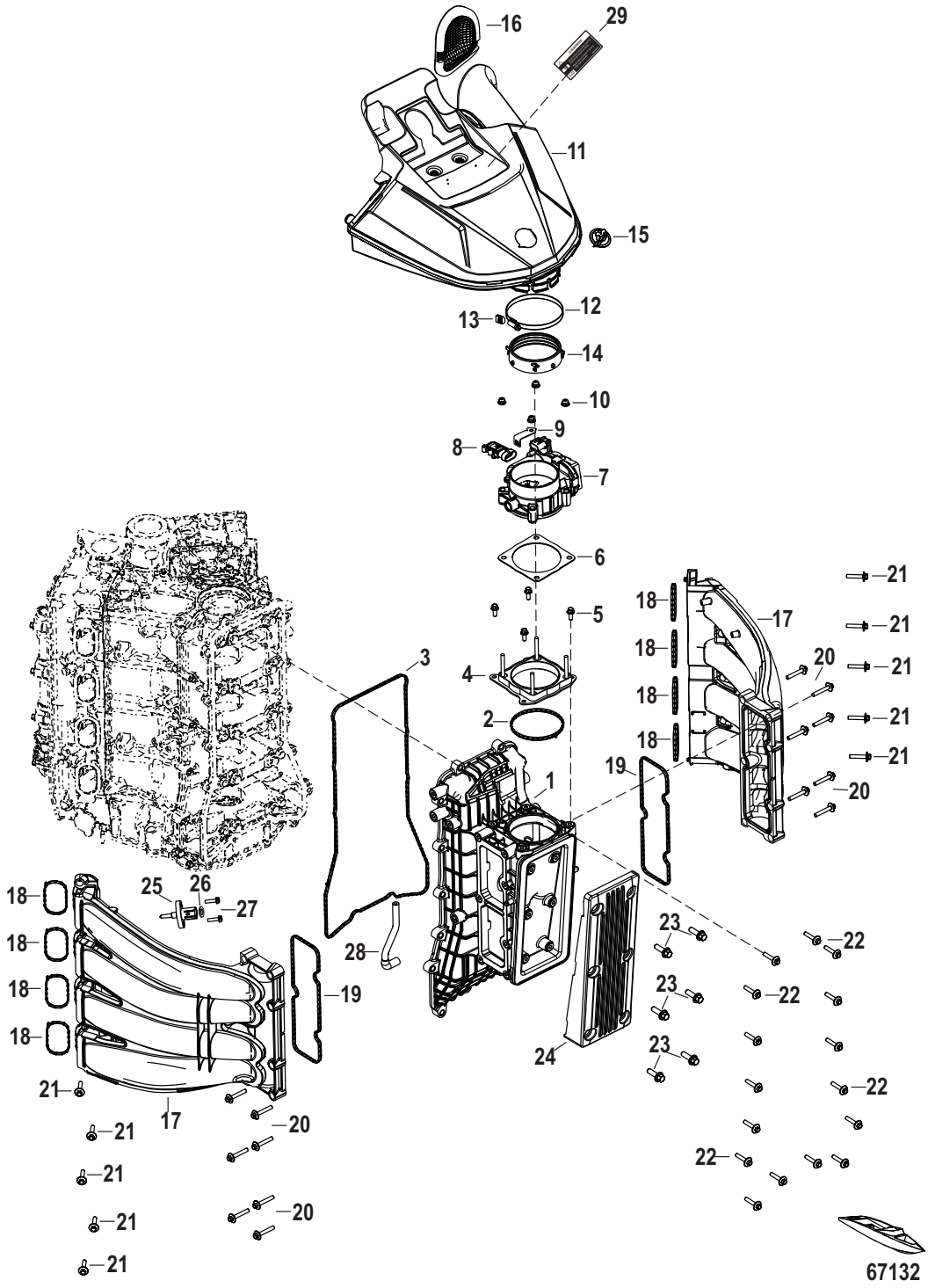

Cat.# 90-8M0145604

Intake System Design I

Ref #	Part Class	Part Number	Description	Comments	Qty	Note
1	0000	8M0142543	MANIFOLD Intake		1	
2	0027	8M0142545	GASKET Throttle Body		1	
3	0027	8M0142544	GASKET Crankcase Cover		1	
4	0000	8M0142763	ISOLATER	200-225 HP	1	
4	0000	8M0142552	ISOLATER	250-300 HP	1	
5	0010	8M0103805	SCREW (M6 x 16MM) Stainless Steel		4	
6	0027	8M0142568	GASKET Throttle Body	200-225 HP	1	
6	0027	8M0109442	GASKET	250-300 HP	1	
7	0000	8M0142276	THROTTLE BODY ASSEMBLY 64 MM	200-225 HP	1	
7	0000	8M0114805	THROTTLE BODY ASSEMBLY 80 MM	250-300 HP	1	
8	0000	8M0142690	SENSOR MAP		1	
9	0000	8M0142550	BRACKET MAP Sensor		1	
10	0011	8M0147750	NUT (M6)		4	
11	0000	8M0142246	AIR INLET ASSEMBLY	200-225 HP	1	
11	0000	8M0142247	AIR INLET ASSEMBLY	250-300 HP	1	
12	0054	8M0142571	CLAMP (70-90 MM) 9 MM WIDE	200-225 HP	1	
12	0054	8M0058341	CLAMP (80-100MM)	250-300 HP	1	
13	0019	8M0074363	CAP		1	
14	0000	8M0146102	SEAL Throttle Body	200-225 HP	1	
14	0000	8M0142556	SEAL Inlet	250-300 HP	1	
15	0037	8M0043700	M-ICON Red, 39mm		1	
16	0035	8M0147749	INTAKE SCREEN		1	
17	0000	8M0142549	RUNNERS INTAKE Port		1	
17	0000	8M0142546	RUNNERS INTAKE Starboard		1	
18	0027	8M0142548	GASKET Intake Manifold		8	
19	0027	8M0142547	GASKET Runner Plenum		2	
20	0010	8M0142553	SCREW (M6 x 37)		14	
21	0010	8M0142554	SCREW (M6 x 30)		10	
22	0010	8M0142555	SCREW (M6 x 30)		16	
23	0010	8M0073002	SCREW (M6 X 20), Hex Flg		6	
24	0000	8M0142477	COVER Intake Manifold		1	
25	0000	891663001	SENSOR ASSEMBLY Temperature		1	
26	0027	8M0142578	GASKET MAT Sensor		1	
27	0010	895054	SCREW (M4 x 16 MM)		2	
28	0032	8M0142551	HOSE MAP Sensor		1	
29	0037	8M0142569	DECAL Warning		1	

Intake System Design II

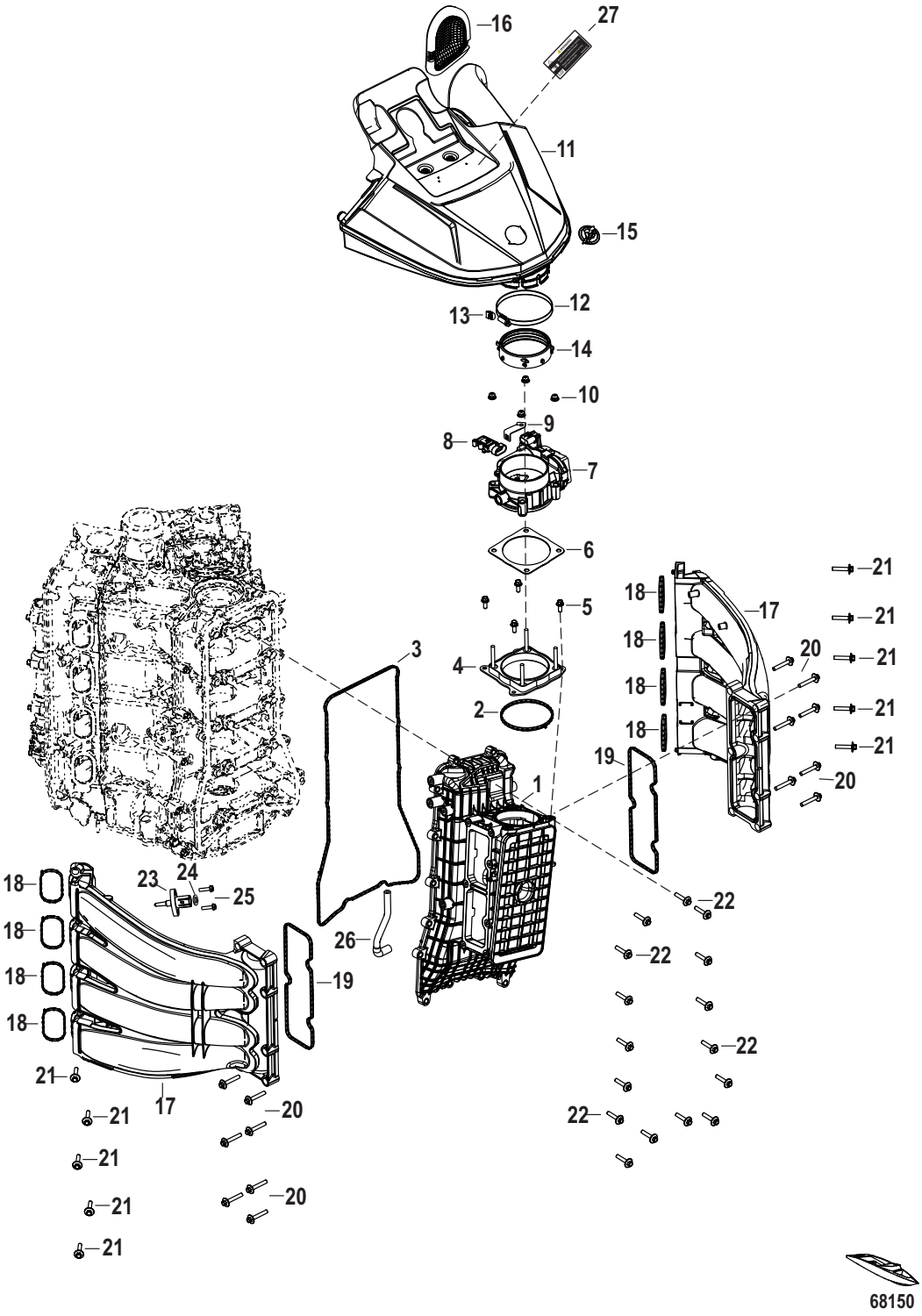

Cat.# 90-8M0145604

Intake System Design II

Ref #	Part Class	Part Number	Description	Comments	Qty	Note
1	0000	8M0153610	INTAKE MANIFOLD		1	
2	0027	8M0142545	GASKET Throttle Body		1	
3	0027	8M0142544	GASKET Crankcase Cover		1	
4	0000	8M0142763	ISOLATER	200-225 HP	1	
4	0000	8M0142552	ISOLATER	250-300 HP	1	
5	0010	8M0103805	SCREW (M6 x 16MM) Stainless Steel		4	
6	0027	8M0142568	GASKET Throttle Body	200-225 HP	1	
6	0027	8M0109442	GASKET	250-300 HP	1	
7	0000	8M0142276	THROTTLE BODY ASSEMBLY 64 MM	200-225 HP	1	
7	0000	8M0114805	THROTTLE BODY ASSEMBLY 80 MM	250-300 HP	1	
8	0000	8M0142690	SENSOR MAP		1	
9	0000	8M0142550	BRACKET MAP Sensor		1	
10	0011	8M0147750	NUT (M6)		4	
11	0000	8M0142246	AIR INLET ASSEMBLY	200-225 HP	1	
11	0000	8M0142247	AIR INLET ASSEMBLY	250-300 HP	1	
12	0054	8M0142571	CLAMP (70-90 MM) 9 MM WIDE	200-225 HP	1	
12	0054	8M0058341	CLAMP (80-100MM)	250-300 HP	1	
13	0019	8M0074363	CAP		1	
14	0000	8M0146102	SEAL Throttle Body	200-225 HP	1	
14	0000	8M0142556	SEAL Inlet	250-300 HP	1	
15	0037	8M0043700	M-ICON Red, 39mm		1	
16	0035	8M0147749	INTAKE SCREEN		1	
17	0000	8M0142549	RUNNERS INTAKE Port		1	
17	0000	8M0142546	RUNNERS INTAKE Starboard		1	
18	0027	8M0142548	GASKET Intake Manifold		8	
19	0027	8M0142547	GASKET Runner Plenum		2	
20	0010	8M0142553	SCREW (M6 x 37)		14	
21	0010	8M0142554	SCREW (M6 x 30)		10	
22	0010	8M0142555	SCREW (M6 x 30)		16	
23	0000	891663001	SENSOR ASSEMBLY Temperature		1	
24	0027	8M0142578	GASKET MAT Sensor		1	
25	0010	895054	SCREW (M4 x 16 MM)		2	
26	0032	8M0142551	HOSE MAP Sensor		1	
27	0037	8M0142569	DECAL Warning		1	

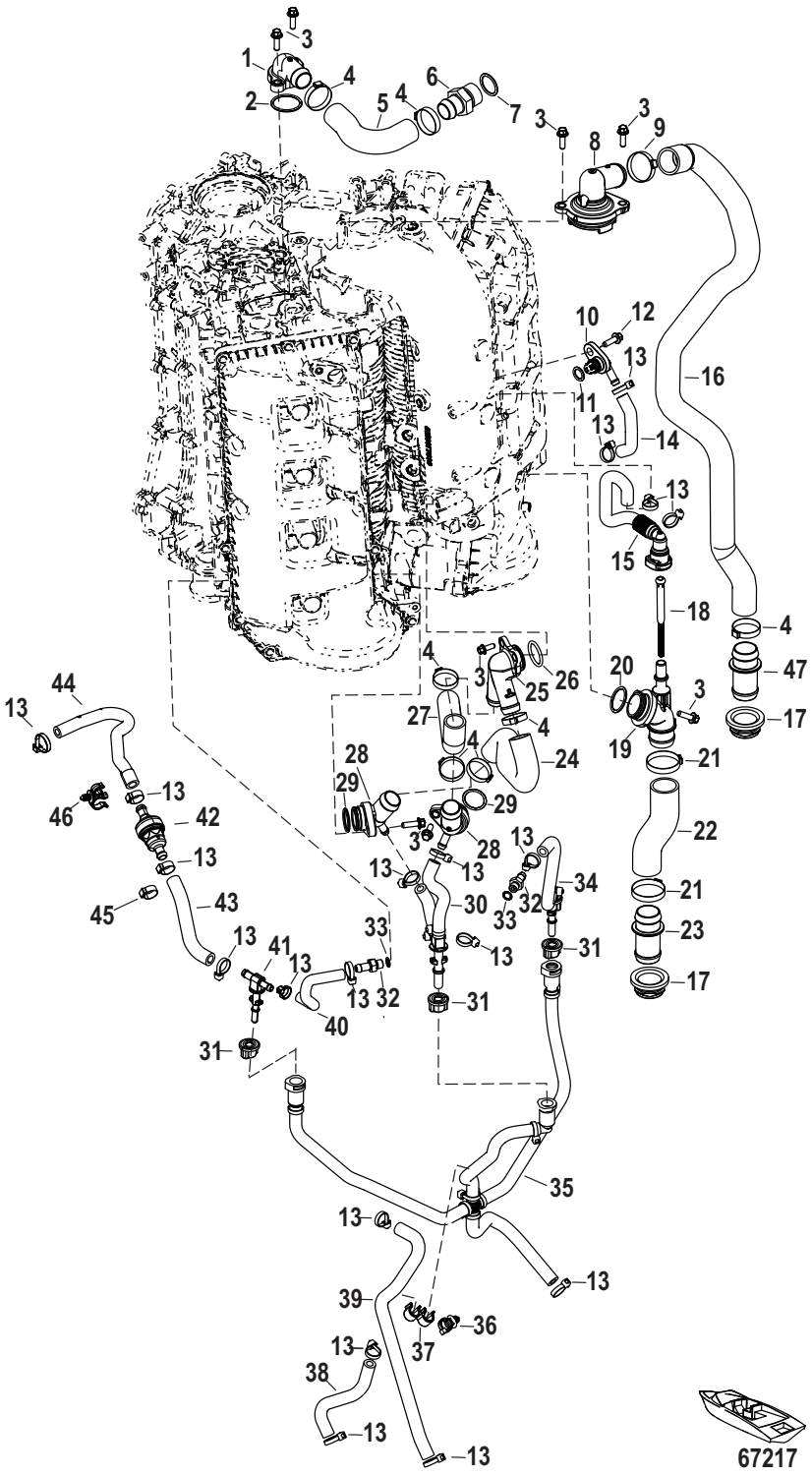
1
2
3
4
5
6
7
8
9
10
11
12
13
14
15
16
17
18
19
20
21
22
23
24
25
26
27
28
29
30
31
32
33
34
35
36
37
38
39
40
41
42
43
44
45
46
47
67217

Cat.# 90-8M0145604

Cooling System

Ref #	Part Class	Part Number	Description	Comments	Qty	Note
1	0022	8M0142494	FITTING	Water Outlet	1	
2	0025	35480	O-RING (1.237 x .103)		1	[1]
3	0010	8M0103806	SCREW (M6 x 20 MM) Stainless Steel		8	
4	0054	8M0028753	CLAMP Oetiker (31.6 Diameter)		6	
5	0032	8M0142503	HOSE Cooling	Port Cylinder to Exhaust	1	
6	0022	8M0142516	FITTING Barbed		1	
7	0025	8M0142517	O-RING (23.6 MM ID X 2.9 MM)		1	[1]
8	0000	8M0137816	THERMOSTAT		1	
9	0054	888988008	CLAMP (34.6 MM)		1	
10	0022	8M0142512	FITTING Strainer		1	
11	0025	201951	O-RING (.487 x .103)		1	[1]
12	0010	8M0103805	SCREW (M6 x 16MM) Stainless Steel		1	
13	0054	816311T	TIE STRAP (8.00 Inches)		17	
14	0032	8M0142513	HOSE	Water Sprayer Exhaust	1	
15	0032	8M0142511	HOSE	Water Sprayer Exhaust	1	
16	0032	8M0142500	HOSE Thermostat Outlet		1	
17	0025	8M0142501	GROMMET	Chap Plate	2	
18	0000	8M0142515	STRAINER Water		1	
19	0022	8M0142514	FITTING Inlet		1	
20	0025	86614	O-RING (1.049 x .103)		1	
21	0054	888988011	CLAMP (38.1 MM)		2	
22	0032	8M0142642	HOSE	Water Inlet	1	
23	0022	8M0142506	FITTING Connector		1	
24	0032	8M0142504	HOSE	Water to Starboard Cylinder Head	1	
25	0022	8M0142507	YFITTING	Exhaust to Cylinder Head	1	
26	0025	26317	O-RING		1	[1]
27	0032	8M0142505	HOSE	Water to Port Cylinder Head	1	
28	0022	8M0142510	FITTING	Water Inlet	2	
29	0025	29845	O-RING (.924 x .103)		2	[1]
30	0032	8M0142518	HOSE ASSEMBLY	Cylinder Head Drain	1	
31	0025	884546	GROMMET		3	
32	0022	8M0142522	FITTING Barbed		2	
33	0025	8M0142523	O-RING (8.1 MM ID X 1.6MM)		2	[1]
34	0032	8M0142498	HOSE ASSEMBLY Water Outlet, Starboard		1	
35	0032	8M0142486	HOSE ASSEMBLY	Water Drain Assembly	1	
36	0054	899145	CLIP Tie Strap		1	
37	0000	888523001	CLIP		1	
38	0032	8M0142524	HOSE	Strainer to Fuel Supply Module Inlet	1	
39	0032	8M0142617	HOSE	Strainer to Mount Cooler	1	
40	0032	8M0142496	HOSE ASSEMBLY Water Outlet, Port		1	
41	0022	8M0142497	FITTING Flush Drain		1	

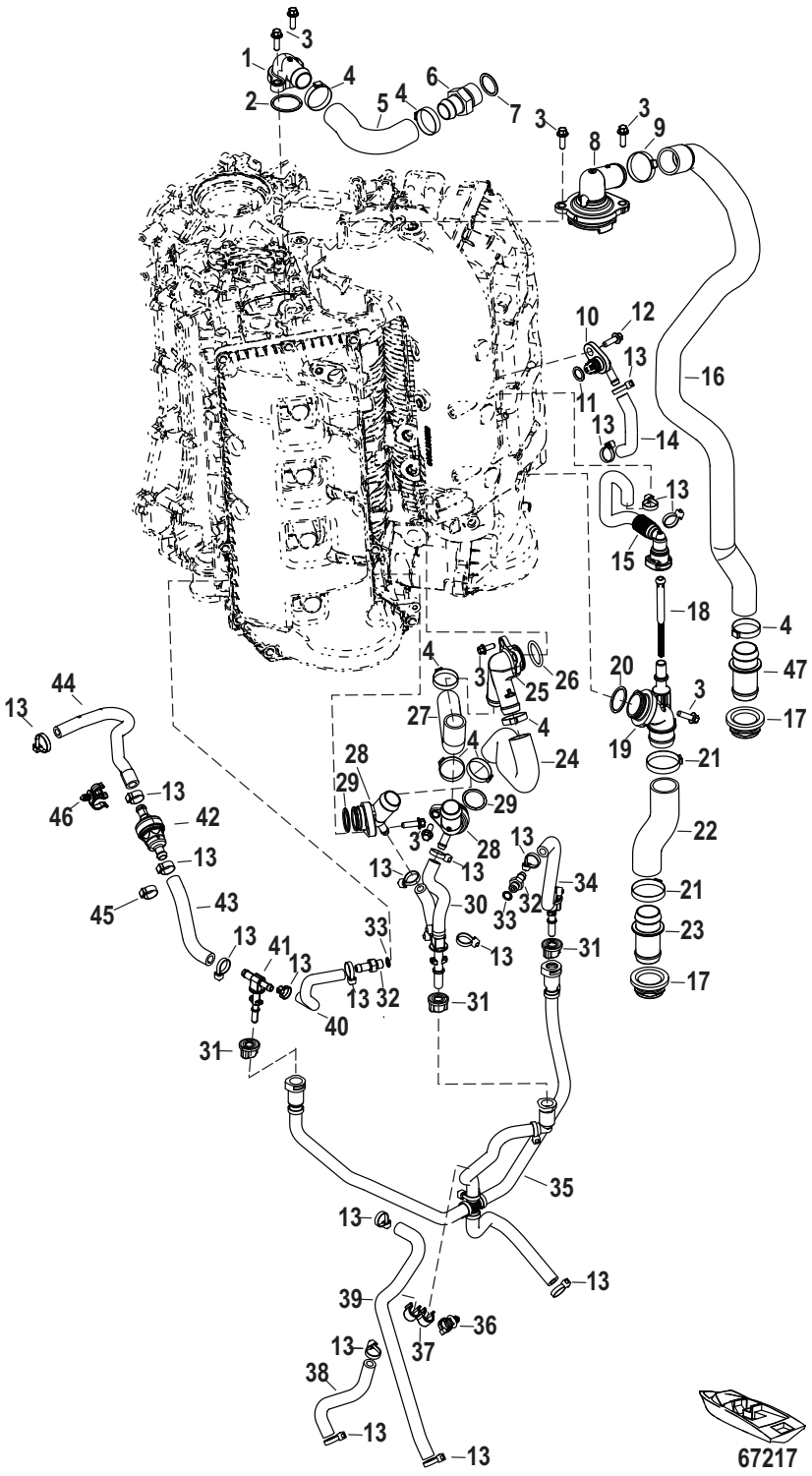
1
2
3
4
5
6
7
8
9
10
11
12
13
14
15
16
17
18
19
20
21
22
23
24
25
26
27
28
29
30
31
32
33
34
35
36
37
38
39
40
41
42
43
44
45
46
47
67217

Cat.# 90-8M0145604

Cooling System

Ref #	Part Class	Part Number	Description	Comments	Qty	Note
42	0032	8M0142528	HOSE ASSEMBLY	Flush	1	
43	0032	8M0142529	HOSE		1	
44	0032	8M0142530	HOSE ASSEMBLY		1	
45	0054	8M0157397	CLAMP Oetiker, 17.5		1	
46	0054	8M0142531	CLIP		1	
47	0022	8M0142509	FITTING Connector		1	
-	0000	8M0149551	POWERHEAD GASKET SET		1	

PART NOTES:

[1] - Component of Powerhead Gasket Set 8M0149551

Adapter Plate

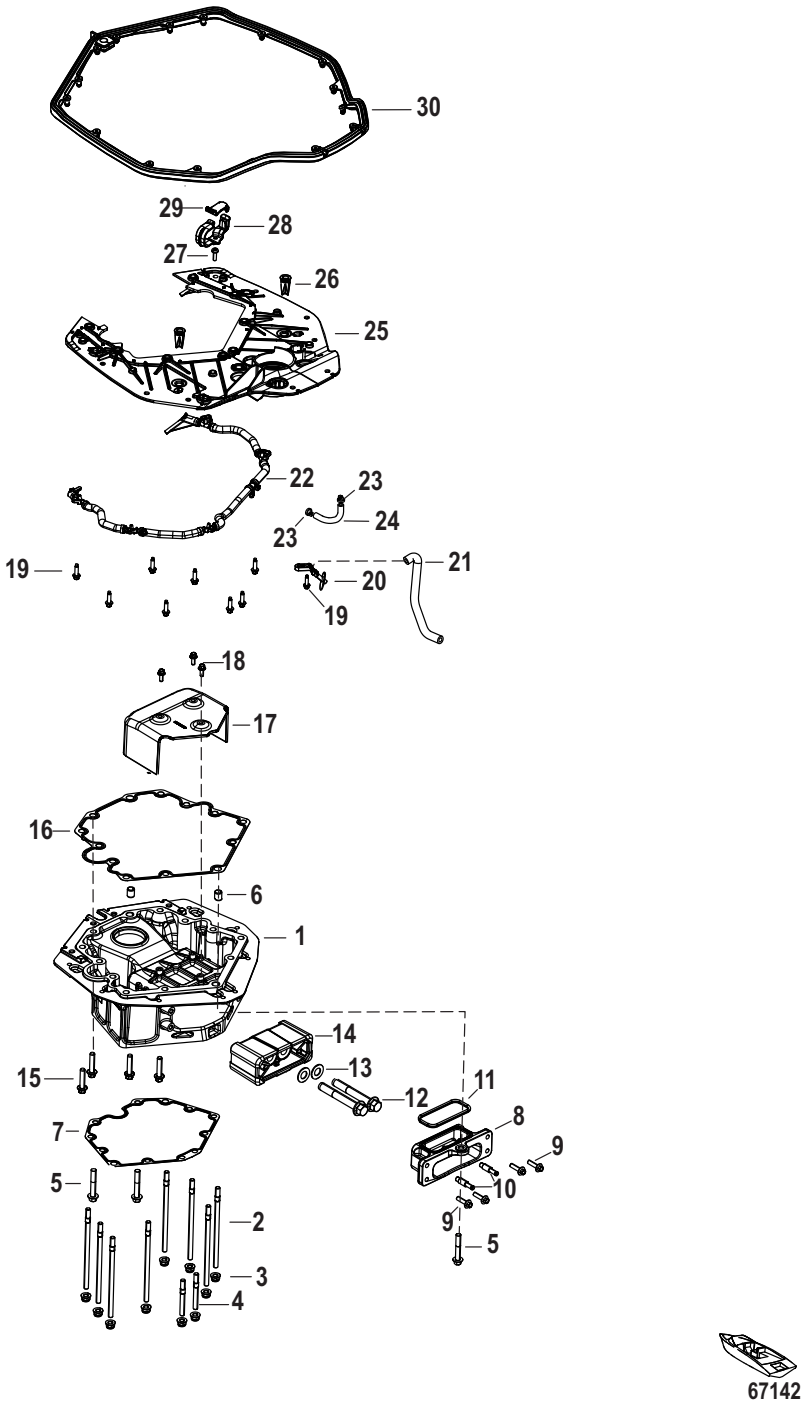

Cat.# 90-8M0145604

Adapter Plate

Ref #	Part Class	Part Number	Description	Comments	Qty	Note
1	0000	8M0142705	ADAPTER PLATE		1	
2	0016	8M0142744	STUD (M10 x 185)		8	
3	0011	8M0142743	NUT (M10 x 1.5)		10	
4	0016	8M0142746	STUD (M10 x 81.5)		2	
5	0010	8M0069690	SCREW (M10 X 1.5 X 60)		3	
6	0017	821327	PIN Dowel		2	
7	0027	8M0142275	GASKET	Adapter Plate to Driveshaft Housing	1	[1]
8	0000	8M0142742	BRACKET Upper Mount	Steering Arm	1	
9	0010	4010730	SCREW (M8 x 30)		4	
10	0022	8M0038205	FITTING Straight		2	
11	0026	8M0142745	SEAL Upper Mount Bracket		1	[1]
12	0010	8M0142981	SCREW (M14x2.00x100) Hex Flg Hd		2	
13	0012	8M0142711	WASHER (28.4 MM x 1.6 MM)		2	
14	0000	8M0142706	MOUNT UPPER		1	
15	0010	8M0103823	SCREW		4	
16	0027	8M0142274	GASKET	Adapter Plate to Cylinder Block	1	[1]
17	0000	8M0142982	SHIELD Oil Deflector		1	
18	0010	8M0103805	SCREW (M6 x 16MM) Stainless Steel		3	
19	0010	8M0142708	SCREW (M6)		9	
20	0000	8M0142748	FITTING	Tell Tale	1	
21	0032	8M0142619	HOSE	Tell Tale to FSM	1	
22	0000	8M0146171	HOSE ASSEMBLY Sprayer		1	
23	0054	816311T	TIE STRAP (8.00 Inches)		2	
24	0032	8M0142618	HOSE		1	
25	0000	8M0142707	PLATE		1	
26	0000	8M0142710	DRAIN Cowl		2	
27	0010	8M0142830	SCREW (M6 x 20)		1	
28	0000	8M0142831	LATCH Bottom		1	
29	0000	8M0142832	LATCH Top		1	
30	0000	8M0142917	SEAL Adapter Plate		1	
-	0000	8M0142971	GASKET SET Powerhead		1	

PART NOTES:

[1] - Component of Powerhead Gasket Set 8M0149551

Cylinder Block

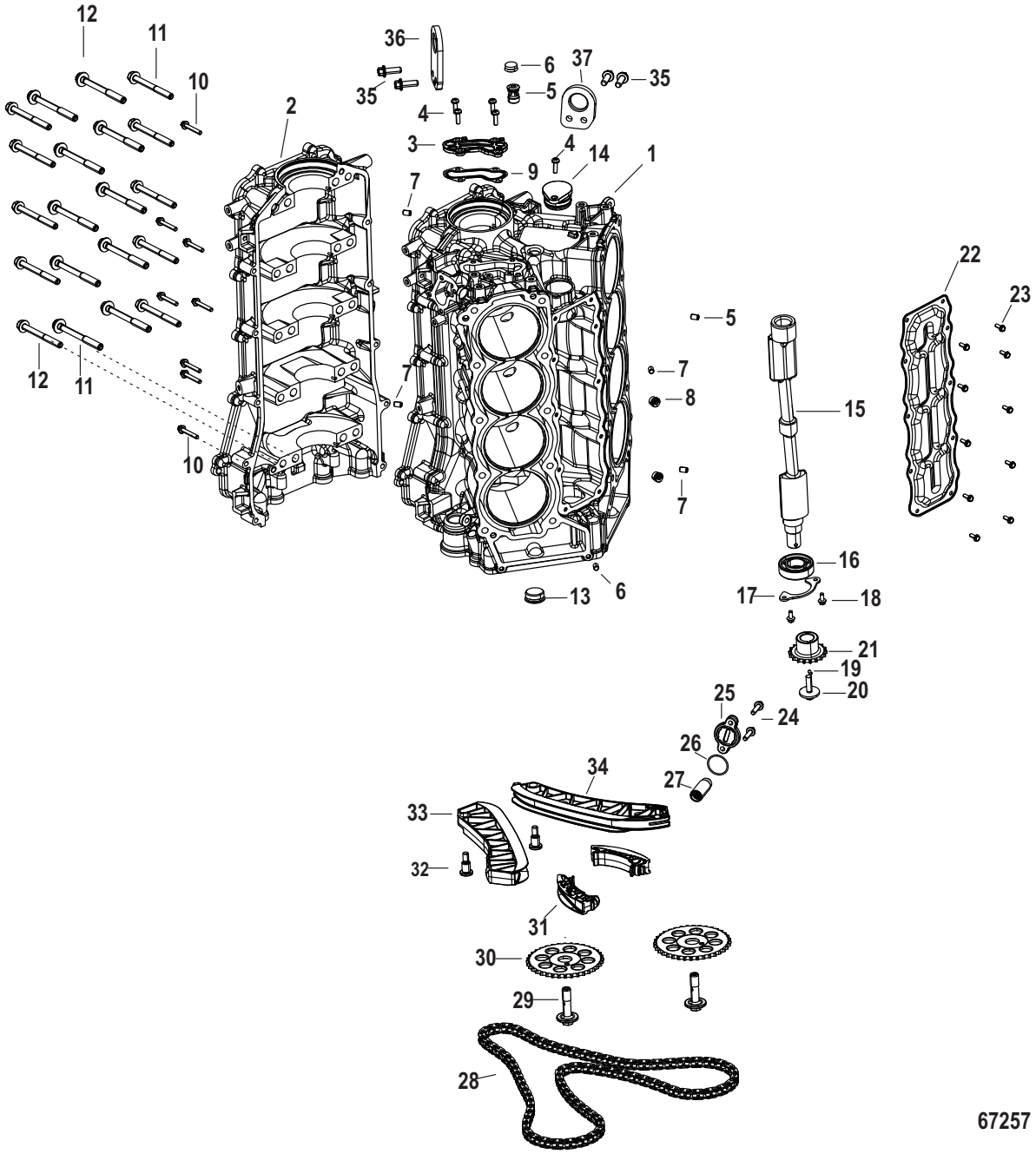

Cat.# 90-8M0145604

Cylinder Block

Ref #	Part Class	Part Number	Description	Comments	Qty	Note
1	0800	8M0142344	CYLINDER BLOCK		1	
2		NSS	NOT SOLD SEPARATE	Bedplate-Crankcase Cover	1	
3	1000	8M0142349	COVER		1	
4	0010	8M0080651	SCREW (M6 x 20)		5	
5	0019	8M0142352	PLUG 18 MM		1	
6	0025	8M0142353	O-RING (0.614 x 0.070)		1	
7	0017	893540	PIN Dowel, 8x12 long		6	
8	0019	8M0087447	PLUG (10MM)		2	
9	0027	8M0142348	GASKET Cover Plate		1	[1]
10	0010	8M0103809	SCREW (M6 x 40 MM) Stainless Steel		10	
11	0010	8M0142347	SCREW (M10 x 96 MM) HEX FLG HD		10	
12	0010	8M0142346	SCREW (M11 x 107 MM) 12 POINT HEX HEAD		10	
13	0019	8M0087454	PLUG (30 MM)		1	
14	0019	8M0142409	PLUG Balancer		1	
15	0000	8M0142421	BALANCE SHAFT		1	
16	0030	8M0142429	BEARING Ball		1	
17	0000	8M0142427	PLATE Retainer		1	
18	0010	8M0142428	SCREW (M5 x 12) HEX FLG		2	
19	0017	8M0142426	PIN Dowel		1	
20	0010	8M0142423	SCREW (M8 x 1.25) HEX FL SEMS		1	
21	0000	8M0142422	SPROCKET		1	
22	1000	8M0142410	COVER Balancer, Stamped		1	
23	0010	40011106	SCREW (M5 x 13) Stainless Steel		10	
24	0010	8M0103807	SCREW (M6 x 25 MM) Stainless Steel		2	
25	1100	8M0064752	END CAP Cam Tensioner		1	
26	0025	898836	O-RING Brown		1	[1]
27	0000	8M0142394	TENSIONER ASSEMBLY Timing Chain		1	
28	0010	8M0142399	CHAIN CAM DRIVE		1	
29	0010	8M0142395	CAM BOLT M12 Special Left Hand		2	
30	0000	8M0142390	SPROCKET Camshaft		2	
31	0010	8M0142400	GUIDE SHORT SPAN		2	
32	0010	8M0086569	SCREW Shoulder (M8 x 1.25)		2	
33	0000	8M0142393	GUIDE Cam Drive		1	
34	0000	8M0142392	GUIDE Moveable		1	
35	0010	8M0103821	SCREW		4	
36	0000	8M0142459	LIFTING EYE Port		1	
37	0000	8M0142448	LIFTING EYE Starboard		1	
-	0061	8M0142280	LONG BLOCK	200/225 HP	1	
-	0061	8M0142279	LONG BLOCK	250/300 HP	1	
-	0000	8M0149551	POWERHEAD GASKET SET		1	

Cylinder Block

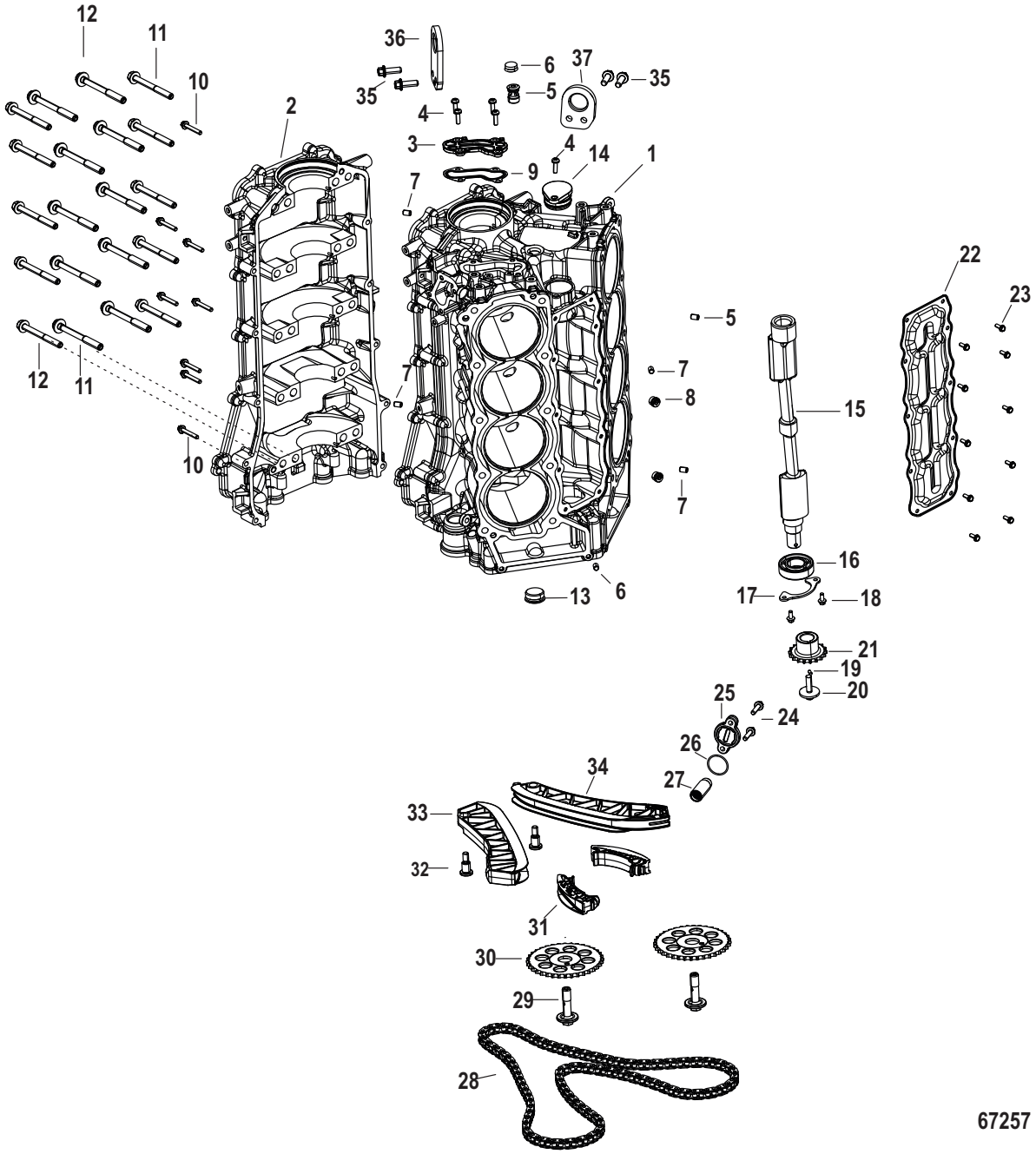

Cat.# 90-8M0145604

Cylinder Block

PART NOTES:

[1] - Component of Powerhead Gasket Set 8M0149551

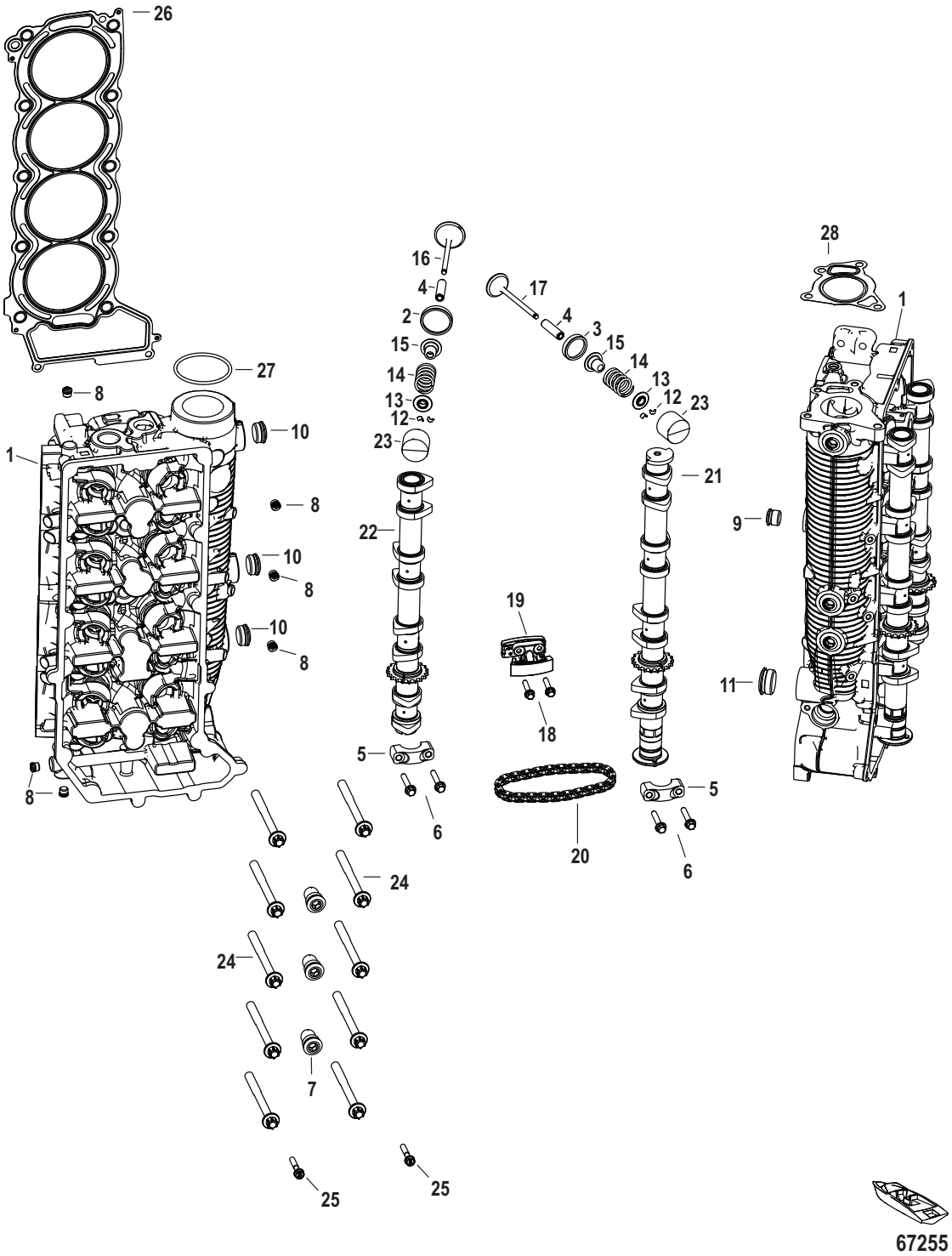
26
27
8
1
10
8
10
8
10
8
8
16
4
2
15
14
13
12
23
22
5
6
24
24
7
25
25
17
4
3
15
14
13
12
23
21
19
18
20
5
6
28
1
9
11
67255

Cat.# 90-8M0145604

Cylinder Head and Camshaft

Ref #	Part Class	Part Number	Description	Comments	Qty	Note
1	0900	8M0150214	CYLINDER HEAD ASSEMBLY Starboard	Starboard	1	
1	0900	8M0150215	CYLINDER HEAD ASSEMBLY Port	Port	1	
2	0000	8M0142354	VALVE Seat, Intake		16	
3	0000	8M0142355	VALVE Seat, Exhaust		16	
4	0000	8M0142358	VALVE Guide		32	
5		NSS	NOT SOLD SEPARATE	Cap-Camshaft	18	
6	0010	892454035	BOLT (M6 x 36)		36	
7	0019	8M0142357	PLUG 21 MM Special		6	
8	0019	8M0087447	PLUG (10MM)		12	
9	0019	8M0087451	PLUG (18MM)		2	
10	0019	8M0087453	PLUG (24 MM)		6	
11	0019	8M0087454	PLUG (30 MM)		2	
12	0028	8M0142364	VALVE Key		32	
13	0000	8M0142363	RETAINER		32	
14	0024	8M0142360	SPRING		32	
15	0000	8M0142359	SEAL Valve		32	
16	0000	8M0142361	VALVE Intake		16	
17	0000	8M0142362	VALVE Exhaust		16	
18	0010	892454030	SCREW (M6 x 30)		4	
19	0000	8M0142367	TENSIONER		2	
20	0000	8M0142366	CHAIN Cam to Cam		2	
21	0400	8M0142411	CAMSHAFT Exhaust, Starboard		1	
21	0400	8M0142416	CAMSHAFT Exhaust, Port		1	
22	0400	8M0142412	CAMSHAFT Intake, Starboard		1	
22	0400	8M0142415	CAMSHAFT Intake, Port		1	
23	0000	8M0142365	TAPPET (3.000)		32/AR	
23	0000	8M0142431	TAPPET (3.015)		32/AR	
23	0000	8M0142439	TAPPET (3.030)		32/AR	
23	0000	8M0142440	TAPPET (3.045)		32/AR	
23	0000	8M0142441	TAPPET (3.060)		32/AR	
23	0000	8M0142438	TAPPET (3.075)		32/AR	
23	0000	8M0142495	TAPPET (3.090)		32/AR	
23	0000	8M0142492	TAPPET (3.105)		32/AR	
23	0000	8M0142443	TAPPET (3.120)		32/AR	
23	0000	8M0142447	TAPPET (3.135)		32/AR	
23	0000	8M0142464	TAPPET (3.150)		32/AR	
23	0000	8M0142465	TAPPET (3.165)		32/AR	
23	0000	8M0142466	TAPPET (3.180)		32/AR	
23	0000	8M0142487	TAPPET (3.195)		32/AR	
23	0000	8M0142488	TAPPET (3.210)		32/AR	
23	0000	8M0142489	TAPPET (3.225)		32/AR	
23	0000	8M0142490	TAPPET (3.240)		32/AR	
23	0000	8M0142491	TAPPET (3.255)		32/AR	
23	0000	8M0142519	TAPPET (3.270)		32/AR	
23	0000	8M0142520	TAPPET (3.285)		32/AR	

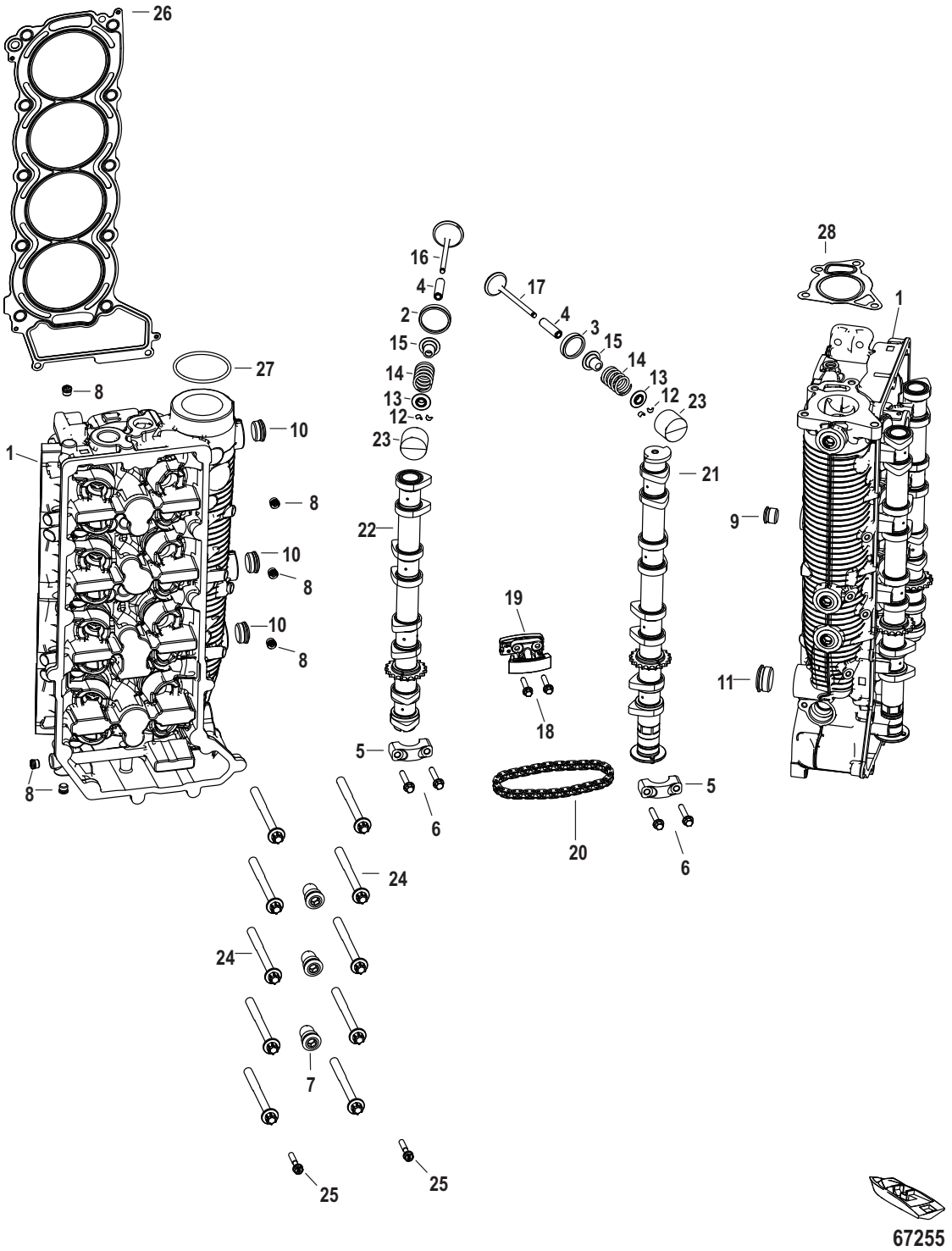
26
27
8
10
1
8
10
8
10
8
8
16
4
2
15
14
13
12
23
22
5
6
24
24
7
25
25
17
4
3
15
14
13
12
23
21
19
18
20
5
6
28
1
9
11
67255

Cat.# 90-8M0145604

Cylinder Head and Camshaft

Ref #	Part Class	Part Number	Description	Comments	Qty	Note
23	0000	8M0142521	TAPPET (3.300)		32/AR	
23	0000	8M0142525	TAPPET (3.315)		32/AR	
23	0000	8M0142527	TAPPET (3.330)		32/AR	
23	0000	8M0142532	TAPPET (3.345)		32/AR	
23	0000	8M0142613	TAPPET (3.360)		32/AR	
23	0000	8M0142252	TAPPET (3.375)		32/AR	
23	0000	8M0142255	TAPPET (3.390)		32/AR	
23	0000	8M0142256	TAPPET (3.405)		32/AR	
23	0000	8M0142257	TAPPET (3.420)		32/AR	
23	0000	8M0142258	TAPPET (3.435)		32/AR	
23	0000	8M0142261	TAPPET (3.450)		32/AR	
23	0000	8M0142263	TAPPET (3.465)		32/AR	
23	0000	8M0142277	TAPPET (3.480)		32/AR	
23	0000	8M0142291	TAPPET (3.495)		32/AR	
23	0000	8M0142292	TAPPET (3.510)		32/AR	
23	0000	8M0142666	TAPPET (3.525)		32/AR	
23	0000	8M0142667	TAPPET (3.540)		32/AR	
23	0000	8M0142668	TAPPET (3.555)		32/AR	
23	0000	8M0142669	TAPPET (3.570)		32/AR	
23	0000	8M0142670	TAPPET (3.585)		32/AR	
23	0000	8M0142698	TAPPET (3.600)		32/AR	
23	0000	8M0142699	TAPPET (3.615)		32/AR	
23	0000	8M0142700	TAPPET (3.630)		32/AR	
23	0000	8M0142701	TAPPET (3.645)		32/AR	
23	0000	8M0142702	TAPPET (3.660)		32/AR	
23	0000	8M0142703	TAPPET (3.675)		32/AR	
23	0000	8M0142704	TAPPET (3.690)		32/AR	
24	0010	8M0142369	SCREW (M10 x 107) TORX FLG HD		20	
25	0010	893754035	SCREW (M6 X 35)		4	
26	0027	8M0142273	GASKET Cylinder Head	Starboard	1	[1]
26	0027	8M0142272	GASKET Cylinder Head	Port	1	[1]
27	0025	8M0142368	O-RING (230 2.484 x .139)		1	[1]
28	0027	8M0142537	GASKET Exhaust Manifold		1	[1]
-	0061	8M0142280	LONG BLOCK	200/225 HP	1	
-	0061	8M0142279	LONG BLOCK	250/300 HP	1	
-	0000	8M0149551	POWERHEAD GASKET SET		1	

PART NOTES:

[1] - Component of Powerhead Gasket Set 8M0149551

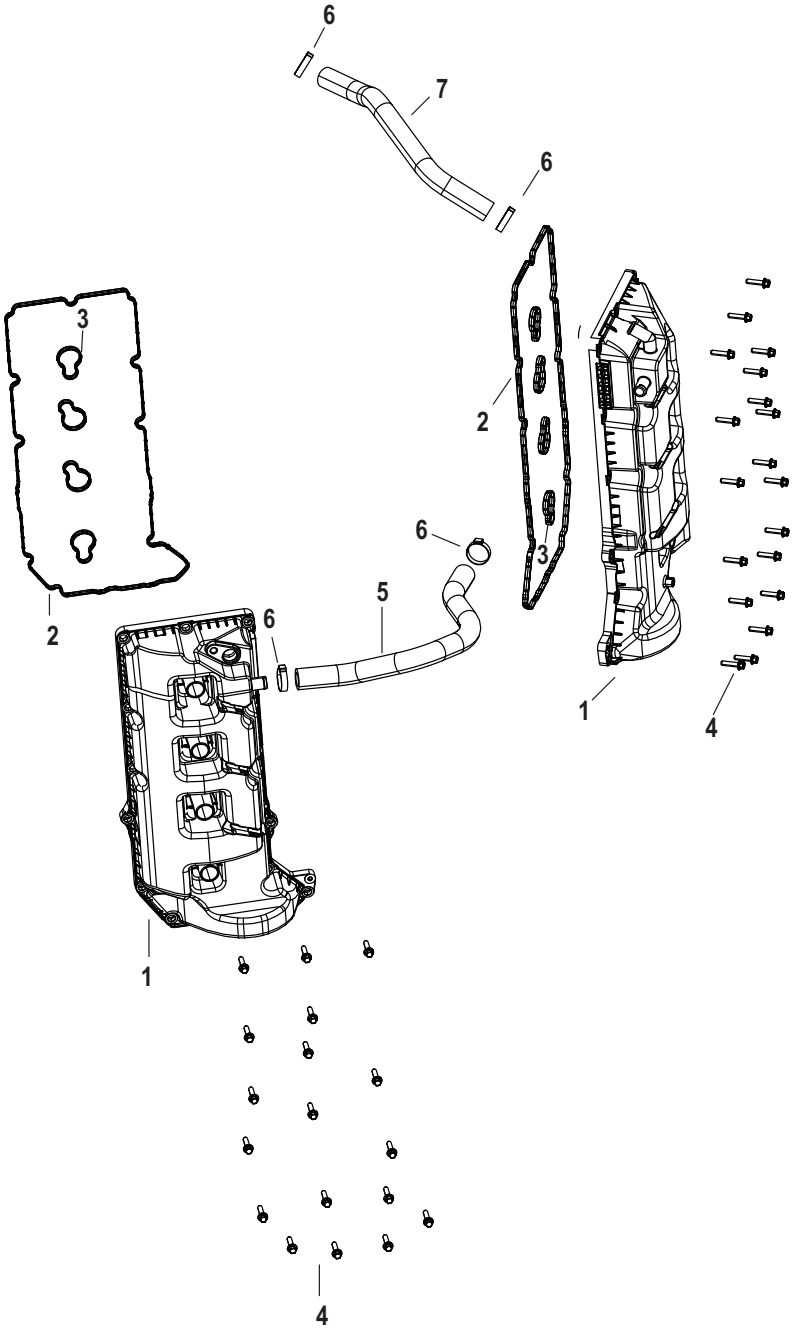
6
7
6
3
2
6
5
6
2
3
1
4
1
4
67258

Cat.# 90-8M0145604

Camshaft Cover

Ref #	Part Class	Part Number	Description	Comments	Qty	Note
1	0000	8M0142282	CAMSHAFT COVER ASSEMBLY Starboard		1	
1	0000	8M0142281	CAMSHAFT COVER ASSEMBLY Port		1	
2	0025	8M0142284	SEAL Camshaft Cover, Starboard		1	[1]
2	0025	8M0142283	SEAL Camshaft Cover, Port		1	[1]
3	0025	8M0142285	SEAL Spark Plug		8	[1]
4	0010	8M0022324	SCREW (M6 x 25 MM)		38	
5	0032	8M0142472	HOSE Port to Starboard Breather		1	
6	0054	855228	CLAMP		4	
7	0032	8M0142473	HOSE Starboard Breather to Intake		1	
-	0000	8M0149551	POWERHEAD GASKET SET		1	

PART NOTES:

[1] - Component of Powerhead Gasket Set 8M0149551

Crankshaft, Pistons and Connecting Rods

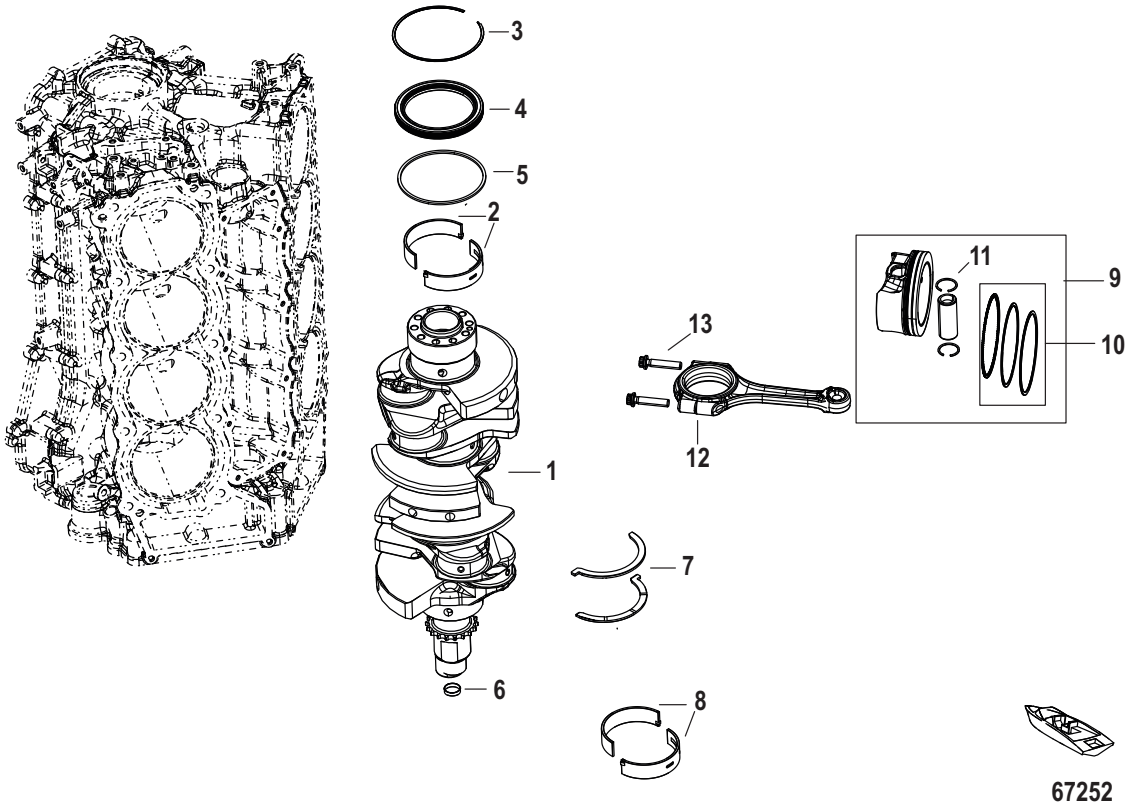

Cat.# 90-8M0145604

Crankshaft, Pistons and Connecting Rods

Ref #	Part Class	Part Number	Description	Comments	Qty	Note
1	0400	8M0142417	CRANKSHAFT		1	
2	0500	8M0147976	BEARING MAIN Green		AR	
2	0500	8M0147977	BEARING MAIN Blue		AR	
2	0500	8M0147978	BEARING MAIN White		AR	
2	0500	8M0147979	BEARING MAIN Orange		AR	
3	0053	8M0142386	RING RETAINING		1	
4	0026	8M0142379	SEAL Main Bearing		1	[1]
5	0023	8M0142385	SPACER		1	
6	0025	8M0034912	O-RING 3.78 X 21.32		1	[1]
7	0012	8M0142424	WASHER THRUST		2	
8	0500	8M0148077	BEARING Connecting Rod, Green		AR	
8	0500	8M0148078	BEARING Connecting Rod, Blue		AR	
8	0500	8M0148079	BEARING Connecting Rod, White		AR	
9	0700	8M0142575	PISTON ASSEMBLY		8	
10	0039	8M0142381	PISTON RING ASSEMBLY		8	
11	0040	8M0142383	CIRCLIP		16	
12	0600	8M0142418	CONNECTING ROD		8	
13	0010	8M6002637	BOLT Connecting Rod		16	
-	0061	8M0142280	LONG BLOCK	200/225 HP	1	
-	0061	8M0142279	LONG BLOCK	250/300 HP	1	

PART NOTES:

[1] - Component of Powerhead Gasket Set 8M0149551

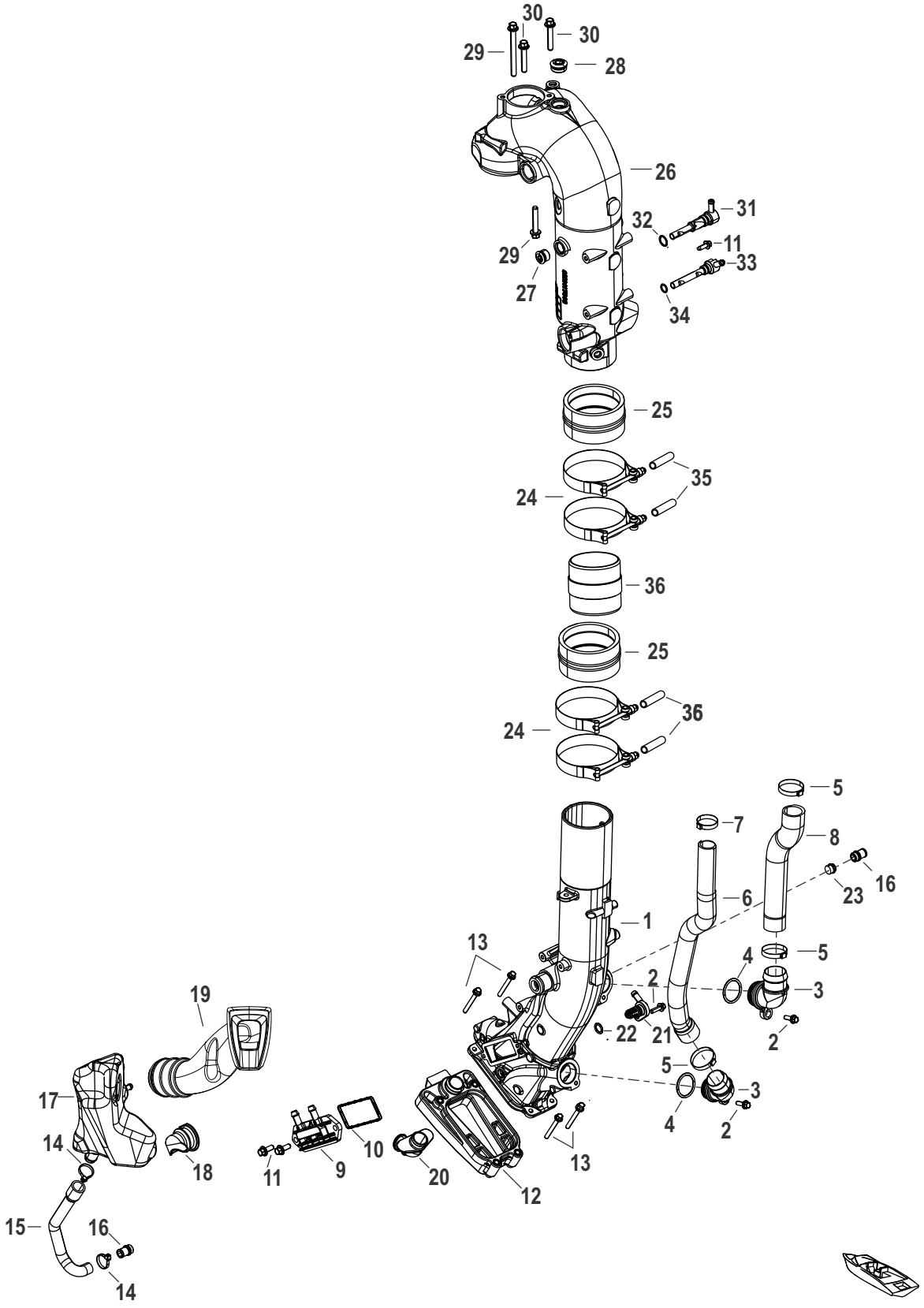
30
30
29
28
26
31
32
11
29
33
27
34
25
35
24
36
25
36
24
5
7
8
16
23
6
1
13
4
5
2
3
22
21
2
5
3
4
2
19
17
14
18
11
9
10
20
13
12
15
16
14
68745

Cat.# 90-8M0145604

Exhaust

Ref #	Part Class	Part Number	Description	Comments	Qty	Note
1	0000	8M0142728	PIPE Exhaust		1	
2	0010	8M0103806	SCREW (M6 x 20 MM) Stainless Steel		3	
3	0022	8M0142731	FITTING ELBOW		2	
4	0025	86614	O-RING (1.049 x .103)		2	[1]
5	0054	888988011	CLAMP (38.1 MM)		3	
6	0032	8M0142727	TUBE Water Outlet		1	
7	0054	8M0028753	CLAMP Oetiker (31.6 Diameter)		1	
8	0032	8M0142725	TUBE Water Inlet		1	
9	0035	8M0142719	STRAINER ASSEMBLY		1	
10	0026	8M0142720	SEAL		1	
11	0010	8M0103805	SCREW (M6 x 16MM) Stainless Steel		3	
12	0025	8M0142721	GROMMET Exhaust		1	
13	0010	8M0142726	SCREW (M6)		4	
14	0054	816311T	TIE STRAP (8.00 Inches)		4	
15	0032	8M0142738	HOSE	Drain-Port	1	
16	0022	8M0142729	FITTING		2	
17	0042	8M0142792	MUFFLER Port		1	
18	0000	8M0142740	GROMMET		1	
19	0025	8M0155262	GROMMET TUBE OUTLET		1	
20	0032	8M0142738	HOSE	Drain - Port	1	
21	0000	8M0142730	FITTING		1	
22	0025	201951	O-RING (.487 x .103)		1	
23	0019	8M0142793	PLUG Drain		1	
24	0054	8M0142541	CLAMP (93.7 MM DIA)		4	
25	0000	8M0142538	COUPLING		2	
26	0000	8M0142535	MANIFOLD Exhaust		1	
27	0019	8M0087451	PLUG (18MM)		1	
28	0019	8M0087453	PLUG (24 MM)		1	
29	0010	8M0142533	SCREW (M8 x 85)		1	
30	0010	88552645	SCREW (M8X45)		3	
31	0000	8M0142534	FITTING Sprayer		1	
32	0025	892446	O-RING (14 X 1.78 MM)		1	[1]
33	0022	8M0142536	FITTING Sprayer		1	
34	0025	863006	O-RING (10.82 x 1.78)		1	[1]
35	0019	8M0148727	CAP Vinyl		4	
36	0000	8M0149575	EXHAUST TUBE		1	
-	0000	8M0149551	POWERHEAD GASKET SET		1	

PART NOTES:

[1] - Component of Powerhead Gasket Set 8M0149551

Swivel Bracket and Steering Arm

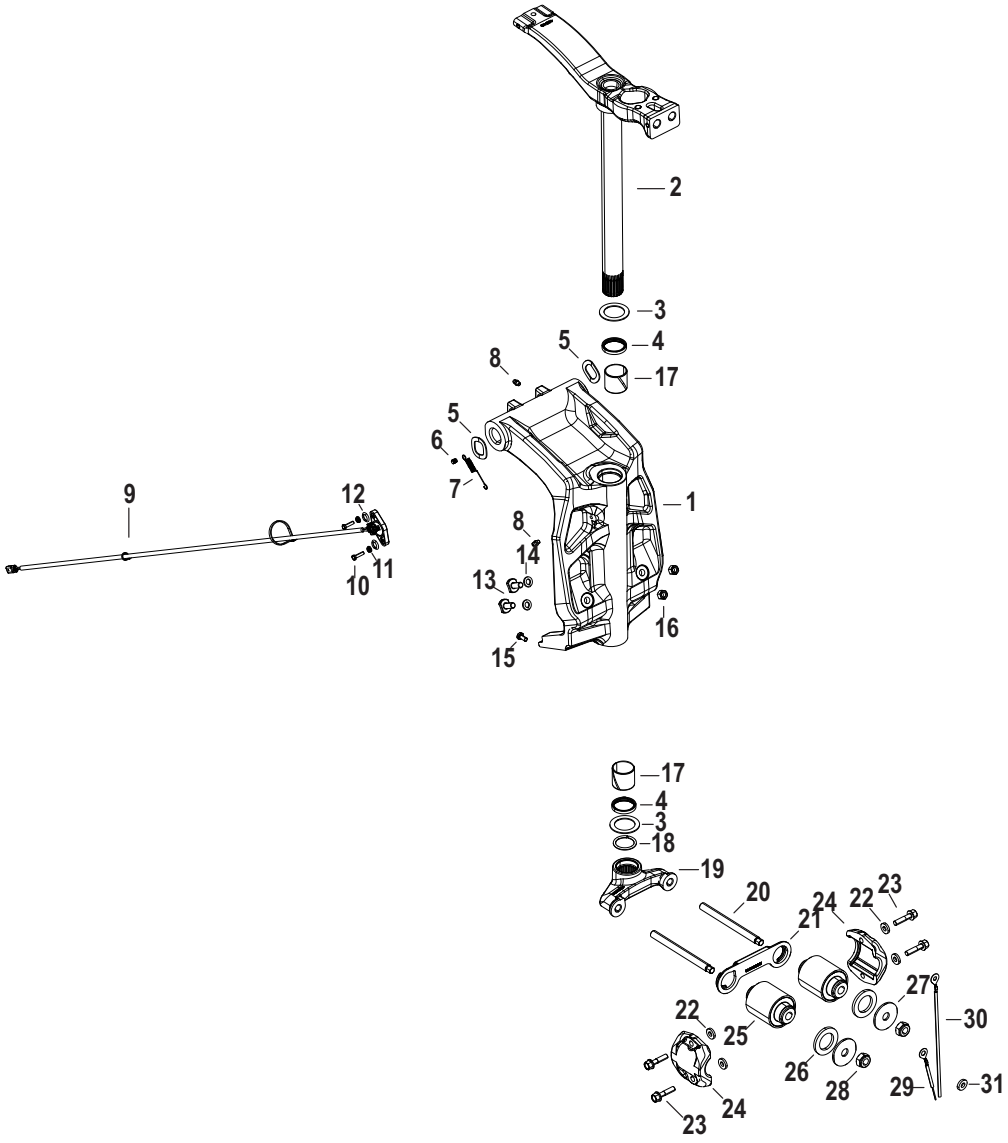

Cat.# 90-8M0145604

Swivel Bracket and Steering Arm

Ref #	Part Class	Part Number	Description	Comments	Qty	Note
1	0400	8M0142794	SWIVEL BRACKET		1	
2	0000	8M0142803	STEERING ARM Black		1	
3	0012	816432	THRUST WASHER		2	
4	0026	8M0034870	SEAL Swivel Tube		2	
5	0013	88750	WASHER		1	
6	0017	893709	PIN		1	
7	0024	830899	SPRING Tension		1	
8	0022	74036	FITTING Grease		2	
9	0000	8M0142805	TRIM POSITION SENSOR		1	
10	0010	852368	SCREW (#10-24 x .750)		2	
11	0013	26996	LOCKWASHER (#10) Stainless Steel		2	
12	0012	89302	WASHER (.203 x .406 x .040)		2	
13	0000	8M0045383	STRIKER PLATE		2	
14	0013	58643	LOCKWASHER (.375)		2	
15	0010	73286	SCREW (.250-20 x .500) Stainless Steel		1	
16	0011	46335	NUT (.375-24)		2	
17	0023	8M0141339	BUSHING Swivel Tube Pivot		1	
18	0053	67684	RING Retaining		1	
19	0000	8M0142797	YOKE		1	
20	0016	8M0142798	STUD (M14 x 146)		2	
21	0000	8M0142796	MOUNT Snubber		1	
22	0012	847541	WASHER		2	
23	0010	81893435	SCREW (M8 x 35)		2	
24	0000	8M0142802	COVER Lower Mount		2	
25	0000	813771003	MOUNT Lower		2	
26	0012	8M0142795	WASHER (1.25 x 19)		2	
27	0012	815432	WASHER (.562 x 2.00 x .125)		2	
28	0011	896602	NUT (M14)		2	
29	0000	8M0142799	CABLE ASSEMBLY		1	
30	0000	8M0147677	CABLE ASSEMBLY 10 IN		1	
31	0012	825190	WASHER		1	

Power Trim/Transom Assembly

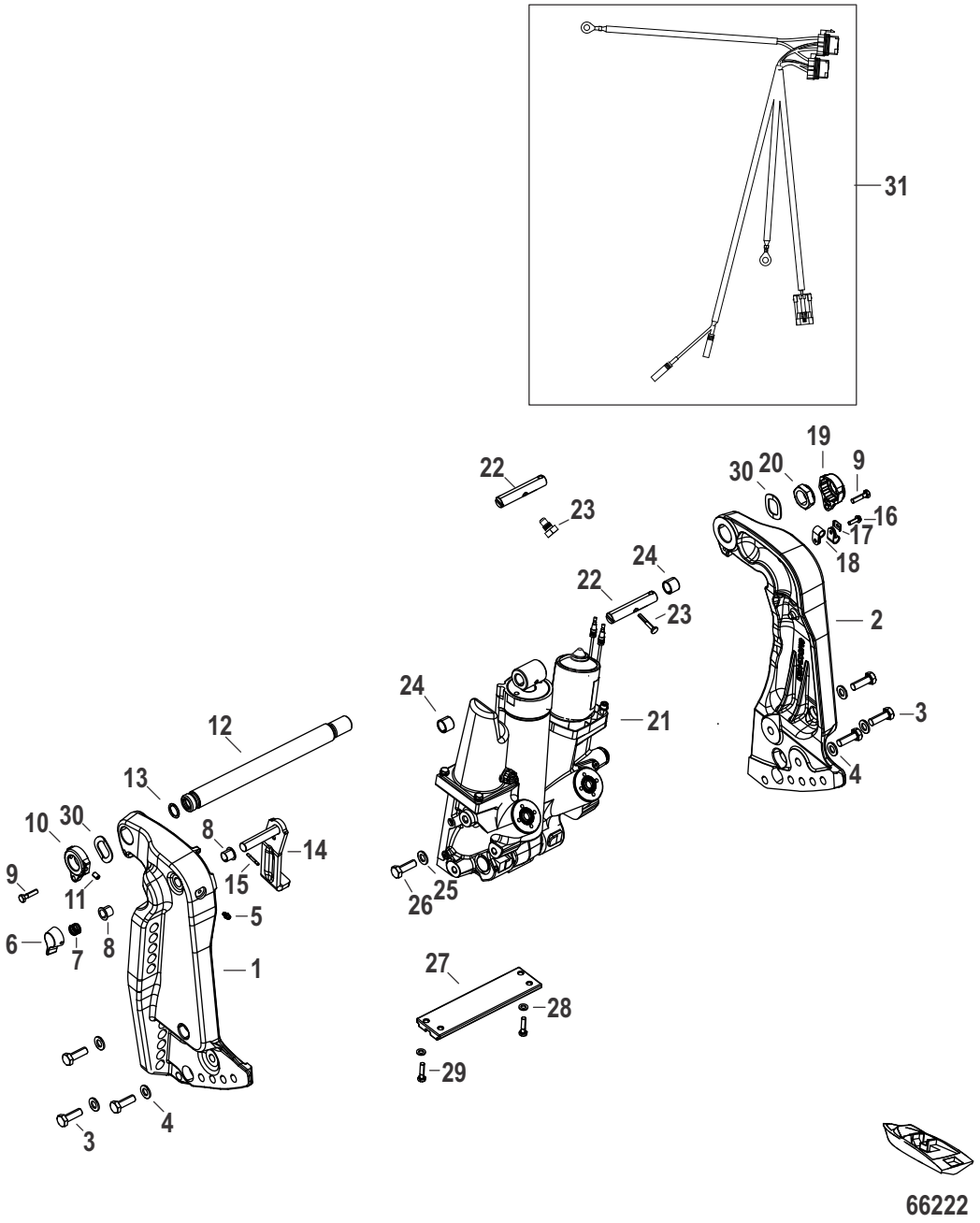

Cat.# 90-8M0145604

Power Trim/Transom Assembly

Ref #	Part Class	Part Number	Description	Comments	Qty	Note
1	1400	8M0142800	BRACKET Transom, Port	Black	1	
2	1400	8M0142801	BRACKET Transom, Starboard	Black	1	
3	0010	858771	SCREW (M10 x 30)		2	
4	0012	4002319	WASHER		2	
5	0022	98727	FITTING Grease		1	
6	0000	99633	KNOB		1	
7	0024	830900	SPRING Compression		1	
8	0023	65830	NYLINER		2	
9	0010	4000330	SCREW (M6 x 25)		2	
10	0011	8M0146189	NUT TILT TUBE LOCK Black		1	
11	0010	8M0142811	SCREW		1	
12	0000	8M0147844	TILT TUBE		1	
13	0025	8M0142810	O-RING (0.612 x .0103)		1	
14	0000	8M0115104	LEVER ASSEMBLY Tilt Lock		1	
15	0017	99615	PIN Groove		1	
16	0010	878609	SCREW (#10-16 x .600)		1	
17	0000	8M0084613	C-WASHER		3	
18	0054	22740	CLIP		2	
19	0000	8M0142809	BRACKET Tilt Tube		1	
20	0011	826164	NUT (.875-14)		1	
21	0000	8M0142341	POWER TRIM ASSEMBLY		1	
22	0017	8M0094889	PIN		1	
22	0017	8M0164978	PIN ROD EYE ASSEMBLY		1	
23	0017	821539	PIN Trilobe		1	
23	0010	8M0050058	SCREW 5/16-24 X .5		1	
24	0023	821207	BUSHING		2	
25	0012	4002319	WASHER		1	
26	0010	858771	SCREW (M10 x 30)		1	
27	0097	818298Q1	ANODE KIT		1	[1]
28	0012	29245	WASHER (.281 x .500 x .060) Stainless Steel		2	
29	0010	4000330	SCREW (M6 x 25)		2	
30	0013	88750	WASHER		2	
31	0084	8M0142682	WIRE HARNESS Trim		1	

PART NOTES:

[1] - Alternate part numbers:

818298A 1Service Part

818298Q 1QS

818298T 1MPP

818298T 3Magnesium

8M0059343Bulk Pack

Power Trim Components Plastic Motor Housing

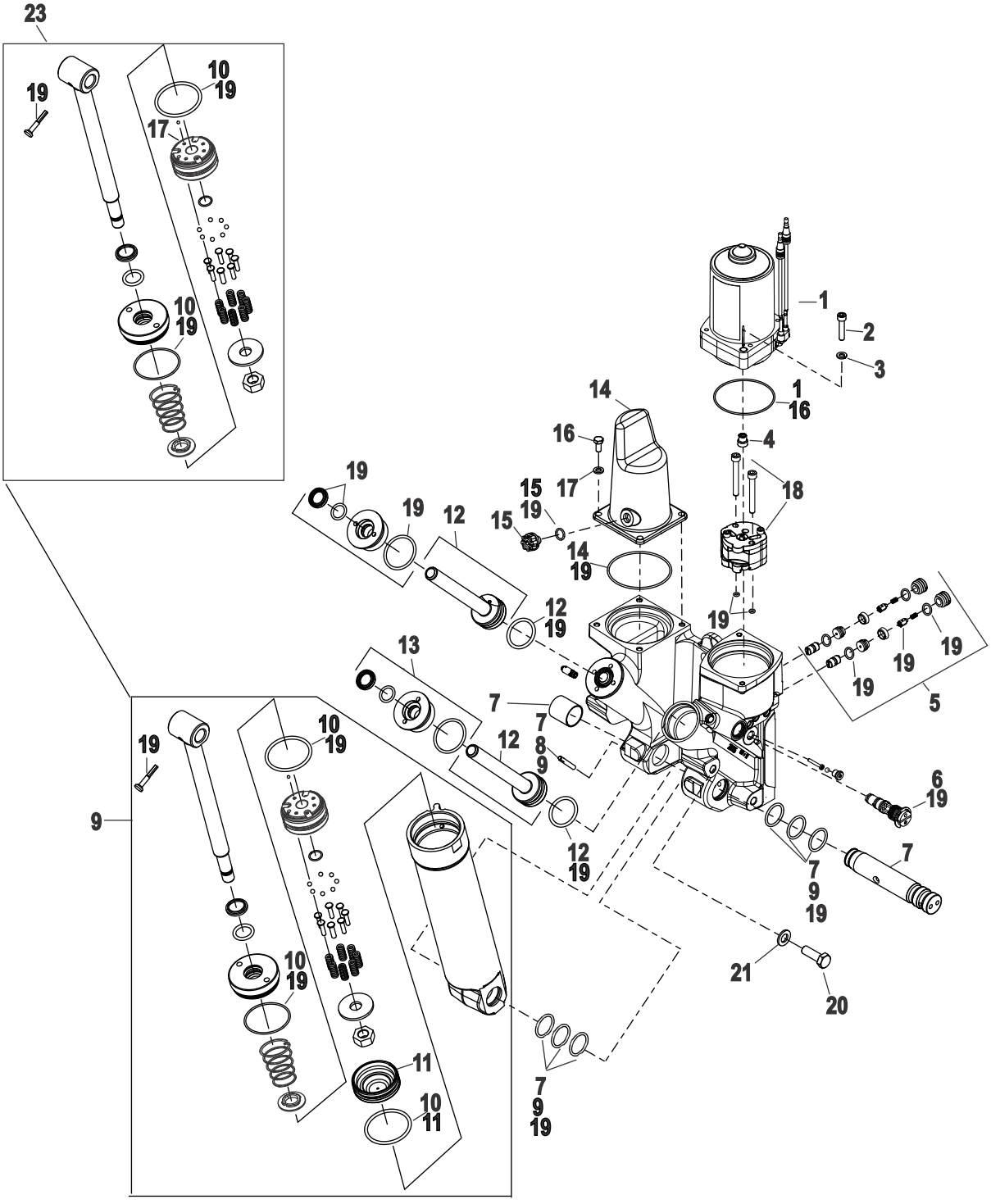

Cat.# 90-8M0145604

Power Trim Components Plastic Motor Housing

Ref #	Part Class	Part Number	Description	Comments	Qty	Note
-	0000	8M0142341	POWER TRIM ASSEMBLY	Plastic Motor Housing	1	
1	0000	8M0142591	MOTOR KIT		1	
2	0010	82494830	SCREW (M6 x 30)		2	
3	0013	400256	LOCKWASHER (M6)		2	
4	0000	8M0090403	COUPLING Drive		1	
5	0000	8M0142996	PO CHECK KIT		1	
6	0000	8M0060141	MANUAL RELEASE KIT		1	
7	0000	8M0142997	TILT SHAFT KIT		1	
8	0017	878267	PIN		1	
9	0000	8M0142998	TILT CYLINDER ASSEMBLY		1	
10	0000	8M0142999	O RING KIT TILT CYLINDER		1	
11	0000	8M0143000	MEMORY PISTON KIT		1	
12	0000	8M0143001	PISTON ASSEMBLY		1	
13	0000	8M0143003	END CAP ASSEMBLY		1	
14	0000	878264A1	RESERVOIR KIT		1	
15	0019	811613	PLUG ASSEMBLY		1	
16	0010	4000327	SCREW (M6 x 14)		4	
17	0012	4002315	WASHER (6.60 X 12.5 X 1.5 mm - SS)		4	
18	0000	8M0143004	PUMP KIT		1	
19	0000	878408A1	REPAIR KIT Power Trim		1	
20	0010	858771	SCREW (M10 x 30)		6	
21	0012	4002319	WASHER		6	
22	0017	8M0094889	PIN		1	
23	0000	8M0143005	SHOCK ROD KIT		1	

Driveshaft Housing

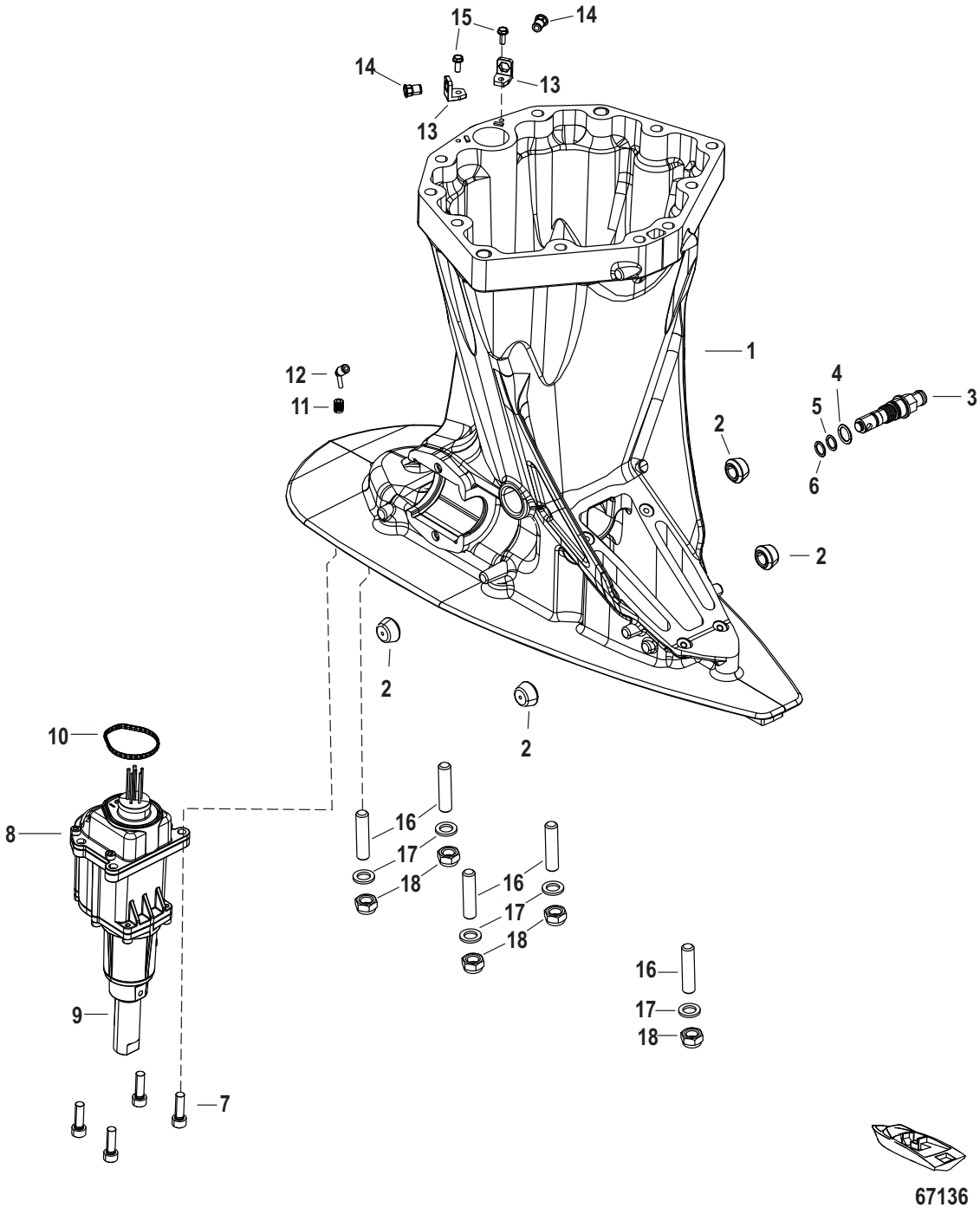

Cat.# 90-8M0145604

Driveshaft Housing

Ref #	Part Class	Part Number	Description	Comments	Qty	Note
1	1500	8M0142775	HOUSING Driveshaft, Black		1	
2	0000	8M0142713	CAP Chap Support		4	
3	0019	8M0112869	OIL PLUG ASSEMBLY		1	
4	0025	85045	O-RING (.551 x .070)		1	
5	0025	863006	O-RING (10.82 x 1.78)		1	
6	0025	8M0036228	O-RING (8.1 X 1.6)		1	
7	0010	8M0142829	SCREW (M6 x 20)		4	
8	0000	8M0142253	SHIFT ACTUATOR		1	
9	0000	8M0147857	SHAFT Coupling		1	
10	0025	8M0142978	SEAL ACTUATOR		1	
11	0022	8M0142714	FITTING		1	
12	0022	8M0155119	FITTING Legris		1	
13	0000	8M0142715	BRACKET Bib Mount		2	
14	0011	8M0142716	INSERT		2	
15	0010	40011106	SCREW (M5 x 13) Stainless Steel		2	
16	0016	8M0008031	STUD (M12 x 1.75 x 52)	Long	5	
16	0016	8M0142781	STUD (M12 x 179)	XLong	5	
16	0016	8M0142788	STUD (M12 x 306)	XXLong	5	
17	0012	856982	WASHER (.500 x .810 x .090) Stainless Steel		5	
18	0011	896895	NUT (M12)		5	

Gear Housing, Driveshaft - 4.80 Torpedo

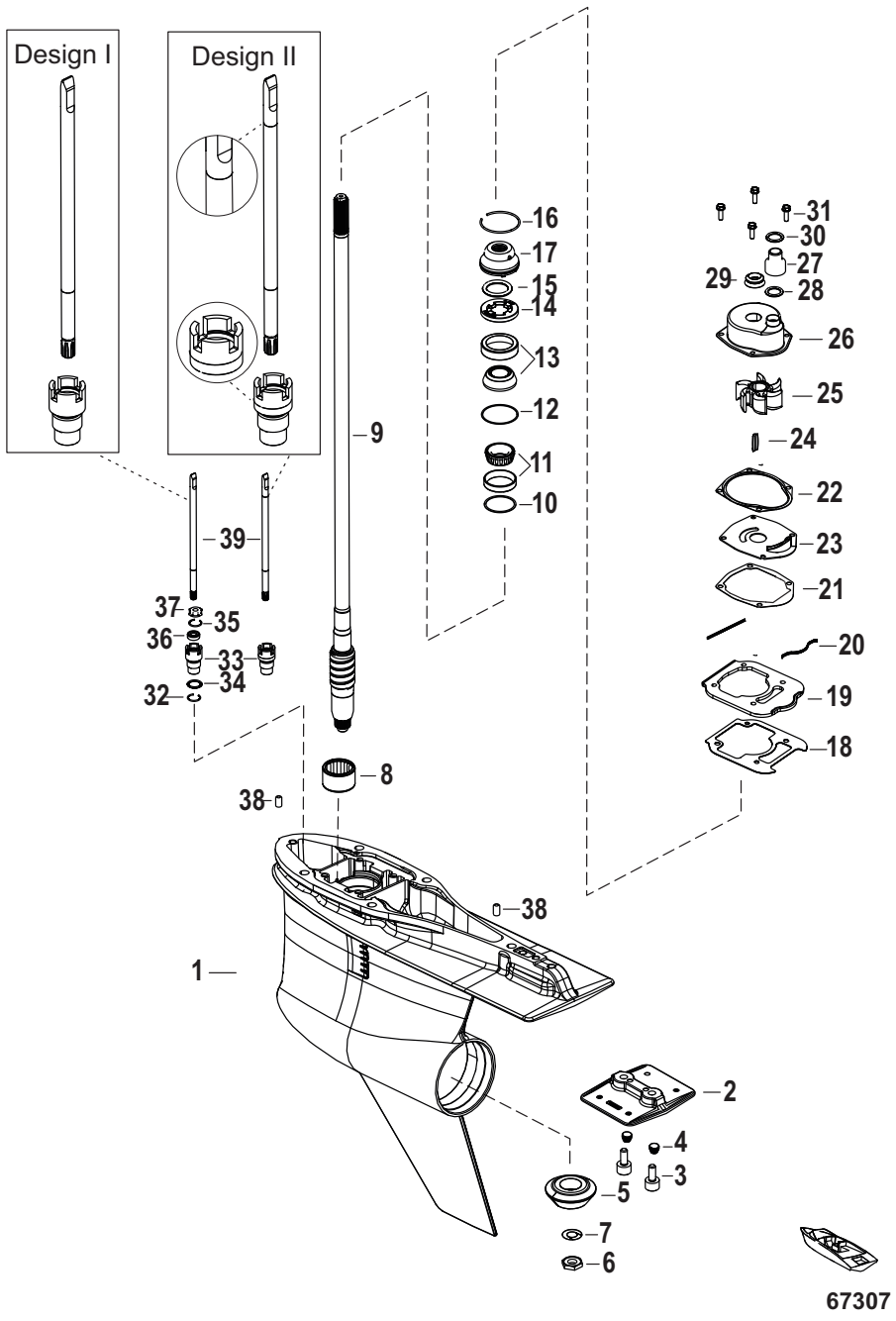

Cat.# 90-8M0145604

Gear Housing, Driveshaft - 4.80 Torpedo

Ref #	Part Class	Part Number	Description	Comments	Qty	Note
-	1600	8M0142294	GEAR HOUSING ASSEMBLY Silver (Standard Long) (1.85)		1	
1	1600	8M0145768	GEAR HOUSING ASSEMBLY Basic, Silver (4.8)		1	
2	0097	8M0137814	ANODE ANTIVENT PLATE		1	
3	0010	8M0142850	SCREW (M10 X 25)		2	
4	0019	8M0142878	PLUG Screw		2	
5	0043	8M0146697	GEAR SET Forward Pinion 13/24	(1.85:1)	1	
6	0011	8M0071654	NUT (.625-18 HX)	Pinion	1	
7	0012	92721	WASHER		1	
8	0031	42647A1	BEARING ASSEMBLY Roller		1	
9	0045	8M0146062	DRIVESHAFT KIT Long		1	
10	0015	8M0063268	SHIM SET		1	
11	0031	8M0146553	BEARING ASSEMBLY Cup/Cone		1	
12	0015	8M0063267	SHIM SET		1	
13	0031	8M0146566	BEARING ASSEMBLY Cup/Cone		1	
14	0000	8245191	RETAINER		1	
15	0025	8M0142854	O RING (2.175 x .103)		1	
16	0053	880719	RING Retaining		1	
17	0000	8M0046297	OIL SEAL CARRIER ASSEMBLY		1	
18	0027	8M0146938	GASKET Water Pump Base		1	
19	0000	8M0142869	COVER HOUSING Gearcase		1	
20	0025	8M0142659	SEAL		2	
21	0027	8M0112903	GASKET Rubber Molded Steel		1	
22	0027	8172771	GASKET		1	
23	0000	8172761	FACEPLATE		1	
24	0028	8M0032833	KEY		1	
25	0047	43026T2	IMPELLER		1	[1]
26	0000	817275A1	HOUSING KIT Water Pump		1	
27	0000	8M0142435	COUPLING Water Pump		1	
28	0025	21836	O-RING (.796 x .139)		1	
29	0026	8M0142851	VRING Face Seal		1	
30	0025	8M0142712	O-RING (0.796 x 0.139)		1	
31	0010	1993720	SCREW (M6 x 20)		4	
32	0053	8M0142866	RING Retaining		1	
33	0023	8M0142859	BUSHING Shift Shaft	Design I	1	
33	0023	8M0164967	BUSHING Shift Shaft	Design II	1	
34	0025	8M0142860	O-RING		1	
35	0053	8M0046563	RETAINING RING		1	
36	0026	8164641	SEAL Oil		1	
37	0012	77674	WASHER		1	
38	0017	8M0084244	PIN Dowel		2	
39	0000	8M0142858	SHIFT SHAFT Long	Design I	1	
39		8M0164968	SHIFT SHAFT Long Includes Bushing Design II	Design II	1	
-	0047	8M0142980	IMPELLER REPAIR KIT		1	
-	0026	8M0142979	SEAL KIT		1	

Gear Housing, Driveshaft - 4.80 Torpedo

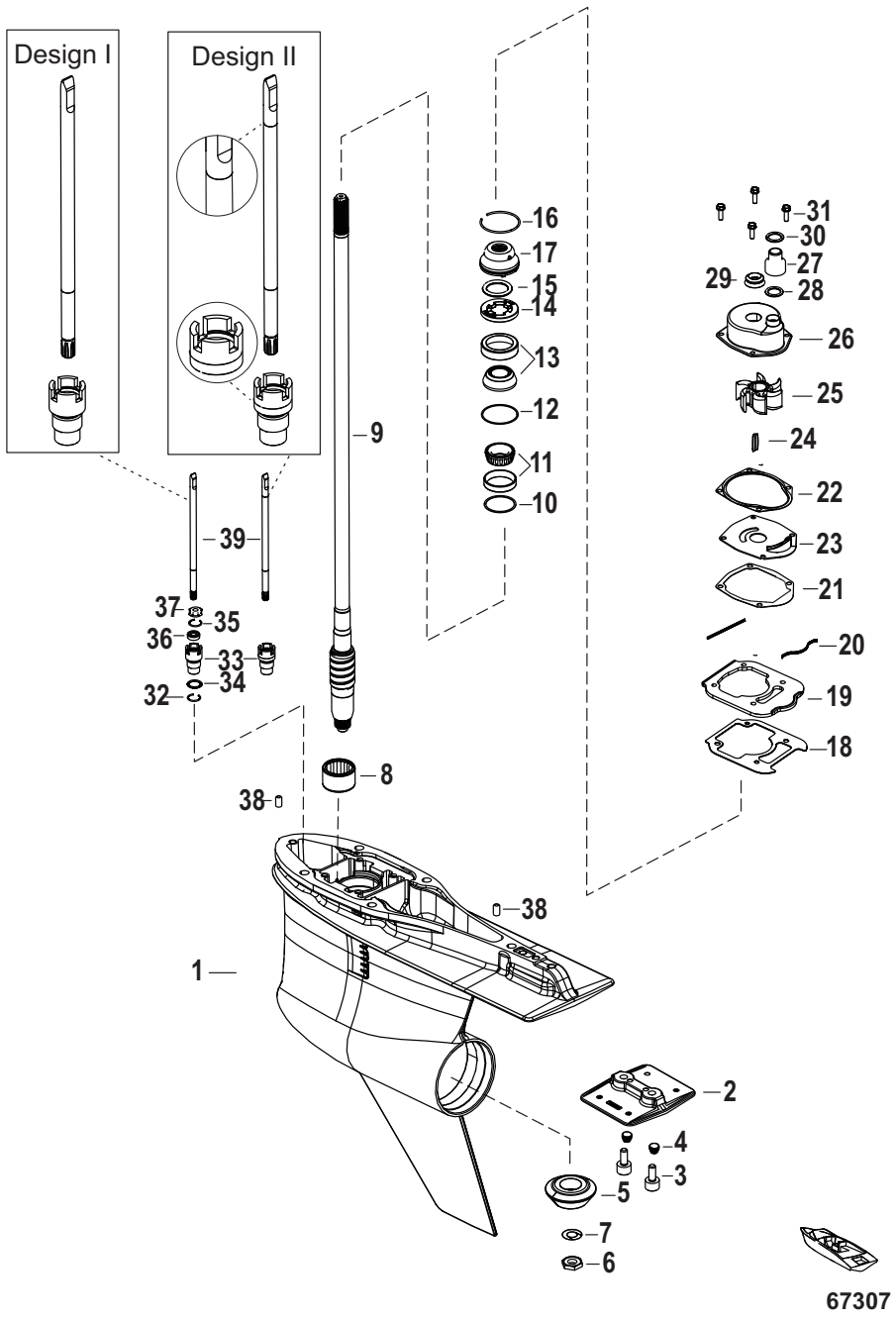

Cat.# 90-8M0145604

Gear Housing, Driveshaft - 4.80 Torpedo

PART NOTES:

[1] - Alternate part numbers:

43026Q02QS

43026T 2Service Part

Gear Housing, Prop Shaft - Standard Rotation, 4.80 Torpedo

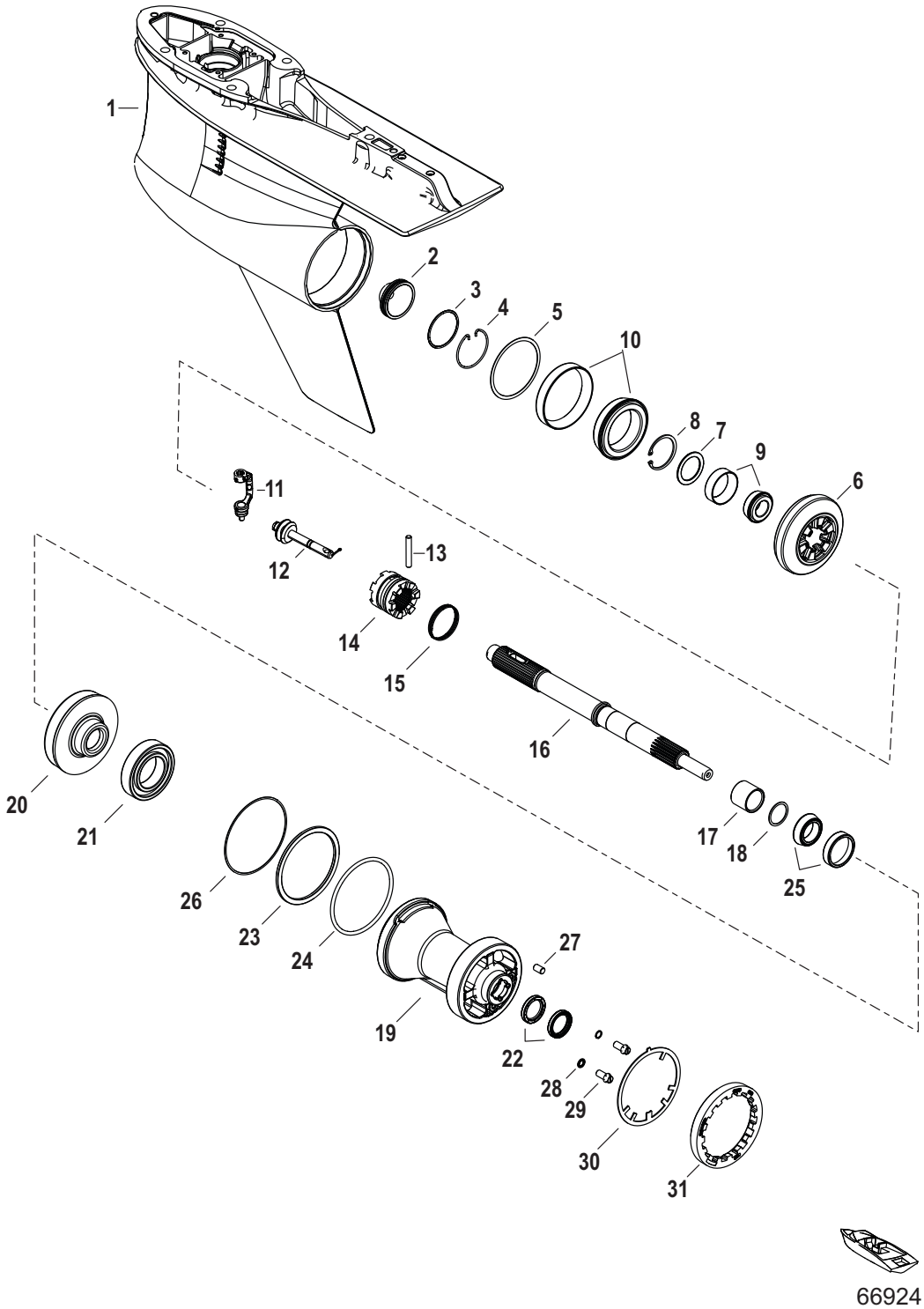

Cat.# 90-8M0145604

Gear Housing, Prop Shaft - Standard Rotation, 4.80 Torpedo

Ref #	Part Class	Part Number	Description	Comments	Qty	Note
-	1600	8M0142294	GEAR HOUSING ASSEMBLY Silver (Standard Long) (1.85)		1	
1	1600	8M0145768	GEAR HOUSING ASSEMBLY Basic, Silver (4.8)		1	
2	0019	8M0142853	PLUG Torpedo		1	
3	0025	8M0142854	O RING (2.175 x .103)		1	
4	0053	880719	RING Retaining		1	
5	0015	8M0063270	SHIM SET		1	
6	0043	8M0146697	GEAR SET Forward Pinion 13/24		1	
7	0012	8M0053823	THRUST WASHER		1	
8	0053	8M0051043	RETAINING RING		1	
9	0031	8M0142835	BEARING Roller Tapered		1	
10	0031	8M0142836	BEARING Roller Tapered		1	
11	0000	8M0046215	CRANK, Shifter 1/4 Pivot Pin		1	
12	0000	8M0142857	SPOOL		1	
13	0017	8M0045493	PIN		1	
14	0052	8M0142849	CLUTCH Sliding		1	
15	0024	8M0050575	SPRING		1	
16	0044	8M0142883	SHAFT Prop		1	
17	0023	8M0064306	SPACER		1	
18	0015	8M0076745	SHIM SET		1	
18	0012	8M0050423	WASHER .020		AR	
18	0012	8M0050424	WASHER .022		AR	
18	0012	8M0050425	WASHER .024		AR	
18	0012	8M0050427	WASHER .026		AR	
18	0012	8M0050428	WASHER .028		AR	
18	0012	8M0050429	WASHER .030		AR	
18	0012	8M0050430	WASHER .032		AR	
18	0012	8M0050431	WASHER .034		AR	
18	0012	8M0050432	WASHER .036		AR	
18	0012	8M0050433	WASHER .038		AR	
18	0012	8M0050434	WASHER .040		AR	
18	0012	8M0050435	WASHER .042		AR	
18	0012	8M0050436	WASHER .044		AR	
18	0012	8M0050437	WASHER .046		AR	
18	0012	8M0050438	WASHER .048		AR	
18	0012	8M0050439	WASHER .050		AR	
19	0000	8M0142890	BEARING CARRIER		1	
20	0043	8M0142891	GEAR Reverse, 24T		1	
21	0030	8M0142873	BEARING		1	
22	0026	888483	SEAL Oil		2	
23	0000	880699	THRUST RING		1	
24	0025	8M0142840	O-RING (3.85 x 0.210)		1	
25	0031	8M0148319	BEARING Cup/Cone		1	
26	0015	8M0063270	SHIM SET		1	
27	0017	8M0109164	PIN		1	

Gear Housing, Prop Shaft - Standard Rotation, 4.80 Torpedo

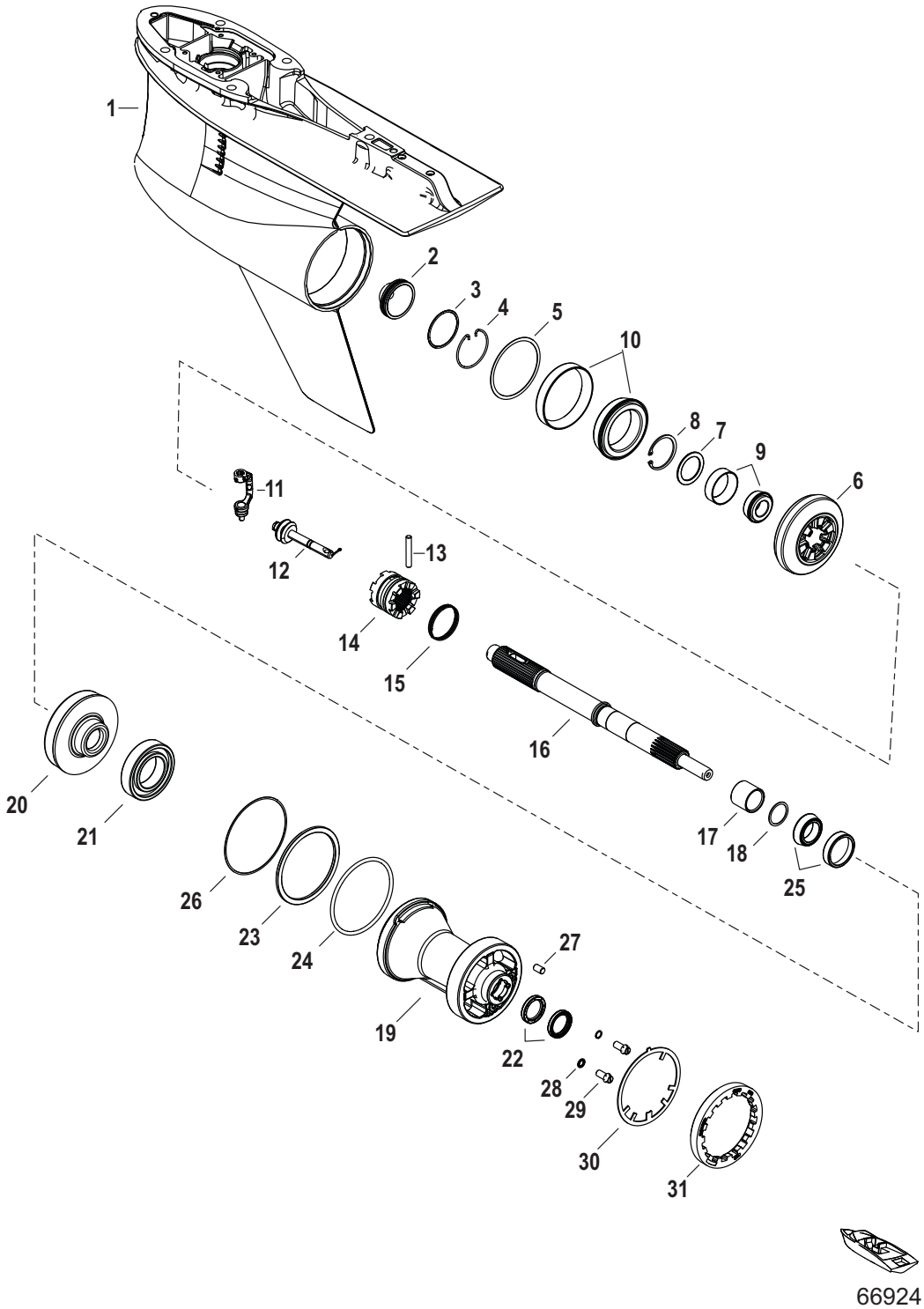

Cat.# 90-8M0145604

Gear Housing, Prop Shaft - Standard Rotation, 4.80 Torpedo

Ref #	Part Class	Part Number	Description	Comments	Qty	Note
28	0026	830749	SEAL		2	
29	0010	8M0071653	SCREW Special		2	
30	0014	8M0142855	TAB WASHER		1	
31	0000	8M2000347	RETAINER		1	
-	0026	8M0142979	SEAL KIT		1	

Gear Housing, Driveshaft - 5.44 Torpedo

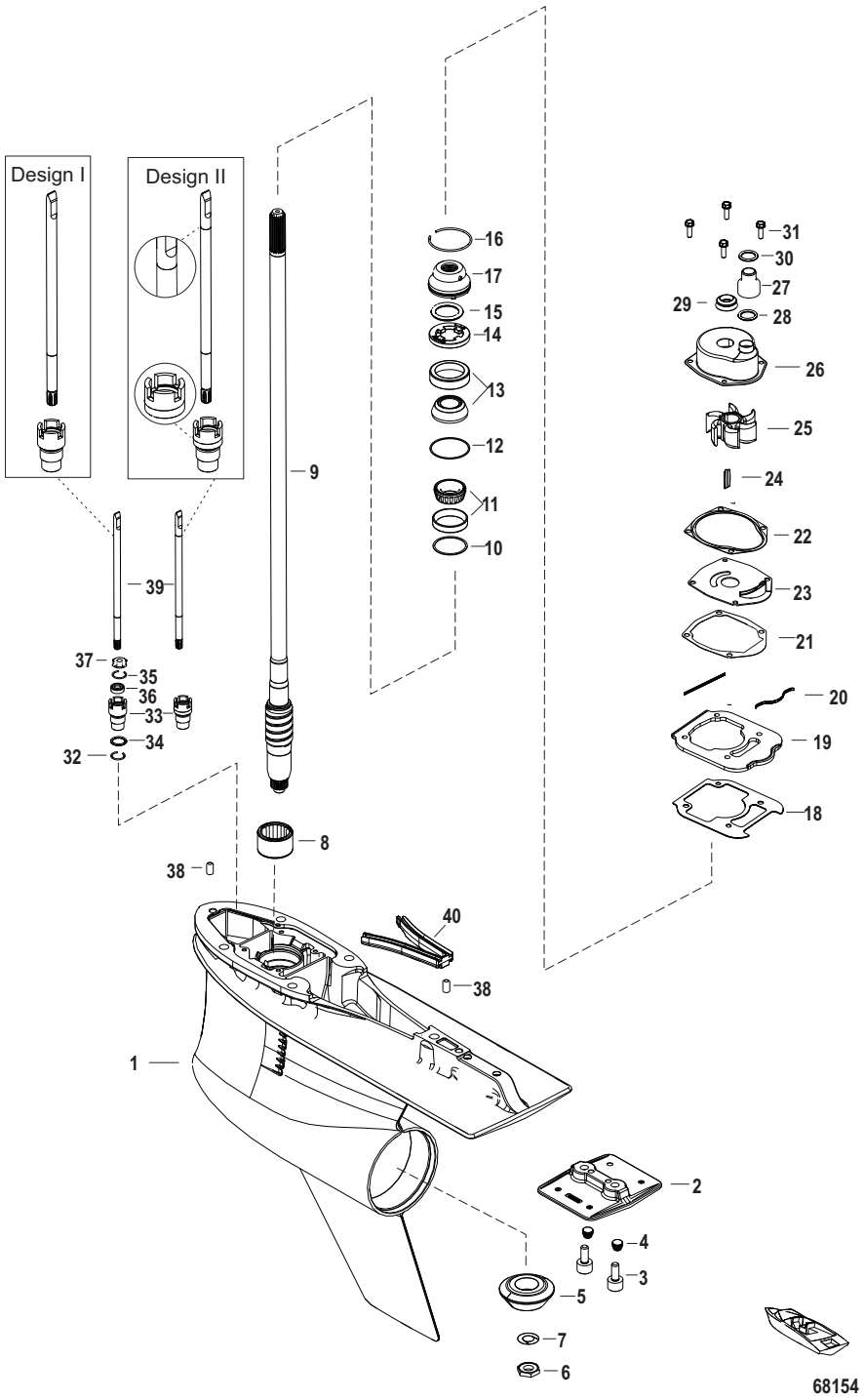

Cat.# 90-8M0145604

Gear Housing, Driveshaft - 5.44 Torpedo

Ref #	Part Class	Part Number	Description	Comments	Qty	Note
-	1600	8M0142309	GEAR HOUSING ASSEMBLY Silver (Standard X-Long) HD 1.75		1	
-	1600	8M0142311	GEAR HOUSING ASSEMBLY Silver (Counter Rotation X-Long) HD 1.75		1	
1	1600	8M0142888	GEAR HOUSING ASSEMBLY Basic, Silver		1	
2	0097	8M0137814	ANODE ANTIVENT PLATE		1	
3	0010	8M0142850	SCREW (M10 X 25)		2	
4	0019	8M0142878	PLUG Screw		2	
5	0043	8M0146648	GEAR SET Forward Gear Pinion 12/21	(1.75:1)	1	
6	0011	8M0046636	NUT		1	[1]
7	0012	8M0062703	WASHER		2	
8	0031	8M0045676	BEARING Roller		1	
9	0045	8M0146065	DRIVESHAFT KIT Long		1	[2]
9	0045	8M0146066	DRIVESHAFT KIT X-Long		1	[3]
10	0015	8M0063268	SHIM SET		1	[1]
11	0031	8M0146553	BEARING ASSEMBLY Cup/Cone		1	[1]
12	0015	8M0063267	SHIM SET		1	[1]
13	0031	8M0146566	BEARING ASSEMBLY Cup/Cone		1	[1]
14	0000	8245191	RETAINER		1	
15	0025	8M0142854	O RING (2.175 x .103)		1	
16	0053	880719	RING Retaining		1	
17	0000	8M0046297	OIL SEAL CARRIER ASSEMBLY		1	
18	0027	8M0146938	GASKET Water Pump Base		1	
19	0000	8M0142869	COVER HOUSING Gearcase		1	
20	0025	8M0142659	SEAL		2	
21	0027	8M0112903	GASKET Rubber Molded Steel		1	
22	0027	8172771	GASKET		1	[1]
23	0000	8172761	FACEPLATE		1	
24	0028	8M0032833	KEY		1	
25	0047	43026T2	IMPELLER		1	[4]
26	0000	817275A1	HOUSING KIT Water Pump		1	
27	0000	8M0142435	COUPLING Water Pump		1	
28	0025	21836	O-RING (.796 x .139)		1	
29	0026	8M0142851	VRING Face Seal		1	
30	0025	8M0142712	O-RING (0.796 x 0.139)		1	
31	0010	1993720	SCREW (M6 x 20)		4	
32	0053	8M0142866	RING Retaining		1	[1]
33	0023	8M0142859	BUSHING Shift Shaft	Design I	1	
33	0023	8M0164967	BUSHING Shift Shaft	Design II	1	[5]
34	0025	8M0142860	O-RING		1	
35	0053	8M0046563	RETAINING RING		1	
36	0026	8164641	SEAL Oil		1	
37	0012	77674	WASHER		1	
38	0017	8M0084244	PIN Dowel		2	
39	0000	8M0142858	SHIFT SHAFT Long	Design I	1	[6]

Gear Housing, Driveshaft - 5.44 Torpedo

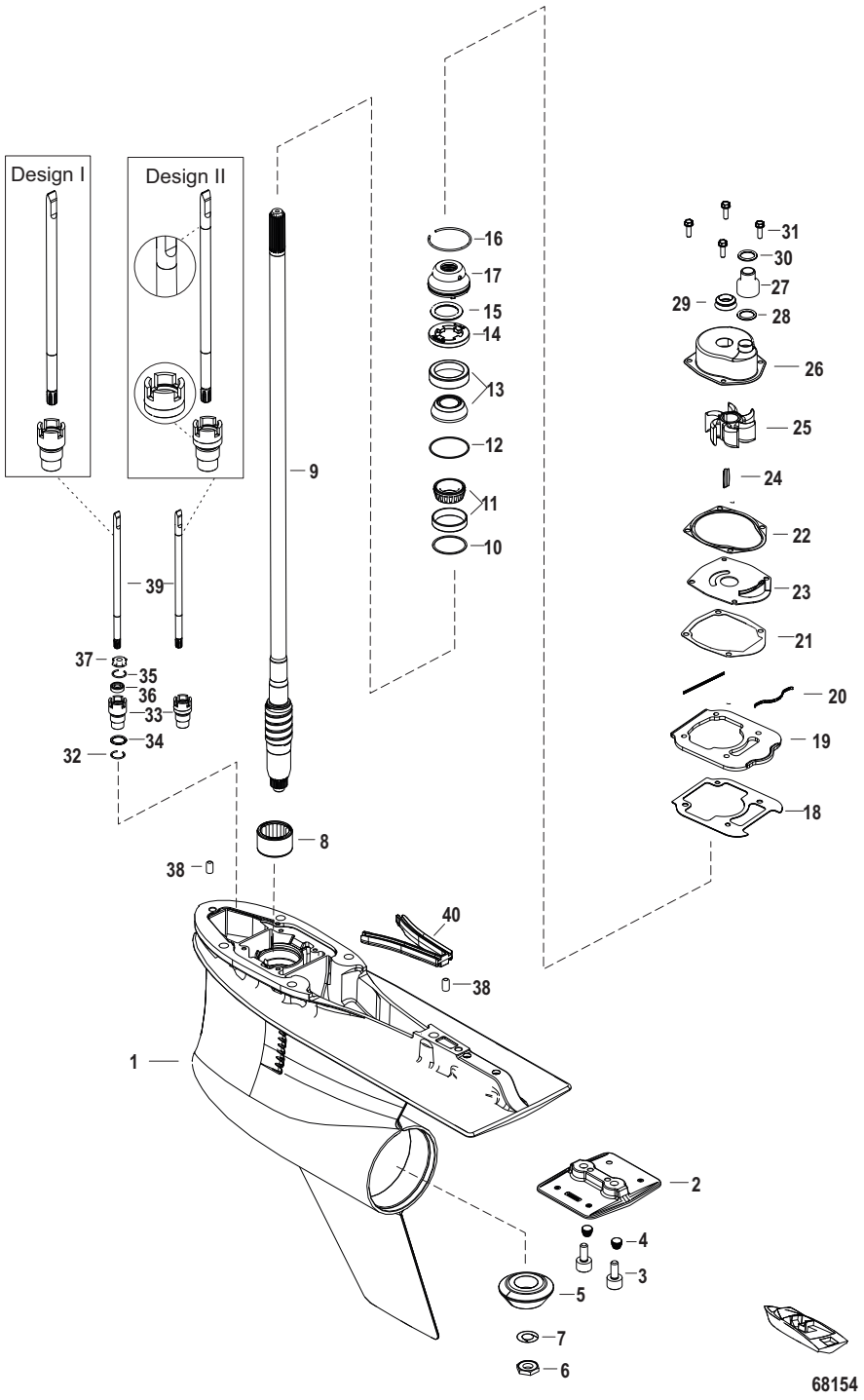

Cat.# 90-8M0145604

Gear Housing, Driveshaft - 5.44 Torpedo

Ref #	Part Class	Part Number	Description	Comments	Qty	Note
39		8M0164968	SHIFT SHAFT Long Includes Bushing Design II	Design II	1	[7]
39	0000	8M0142865	SHIFT SHAFT X-Long	Design I	1	[8]
39	0000	8M0164969	SHIFT SHAFT X-Long Includes Bushing Design II	Design II	1	[9]
40	0019	8M0142587	PLUG Lower Relief Muffler		1	
-	0047	8M0142980	IMPELLER REPAIR KIT		1	
-	0026	8M0142979	SEAL KIT		1	

PART NOTES:

[1] - Component of Driveshaft Kit 5.44 8M0146065
Component of Driveshaft Kit 5.44 8M0146066
Component of Driveshaft Kit 5.44 8M0168204
Component of Driveshaft Kit 5.44 8M0168208

[2] - Component of Driveshaft Kit 5.44 8M0146065
Component of Driveshaft Kit 5.44 8M0168204

[3] - Component of Driveshaft Kit 5.44 8M0146066
Component of Driveshaft Kit 5.44 8M0168208

[4] - Alternate part numbers:

43026Q02QS

43026T 2Service Part

[5] - Component of Driveshaft Kit 5.44 8M0168204
Component of Driveshaft Kit 5.44 8M0168208

[6] - Component of Driveshaft Kit 5.44 8M0146065

[7] - Component of Driveshaft Kit 5.44 8M0168204

[8] - Component of Driveshaft Kit 5.44 8M0146066

[9] - Component of Driveshaft Kit 5.44 8M0168208

Gear Housing, Prop Shaft - Standard Rotation, 5.44 Torpedo

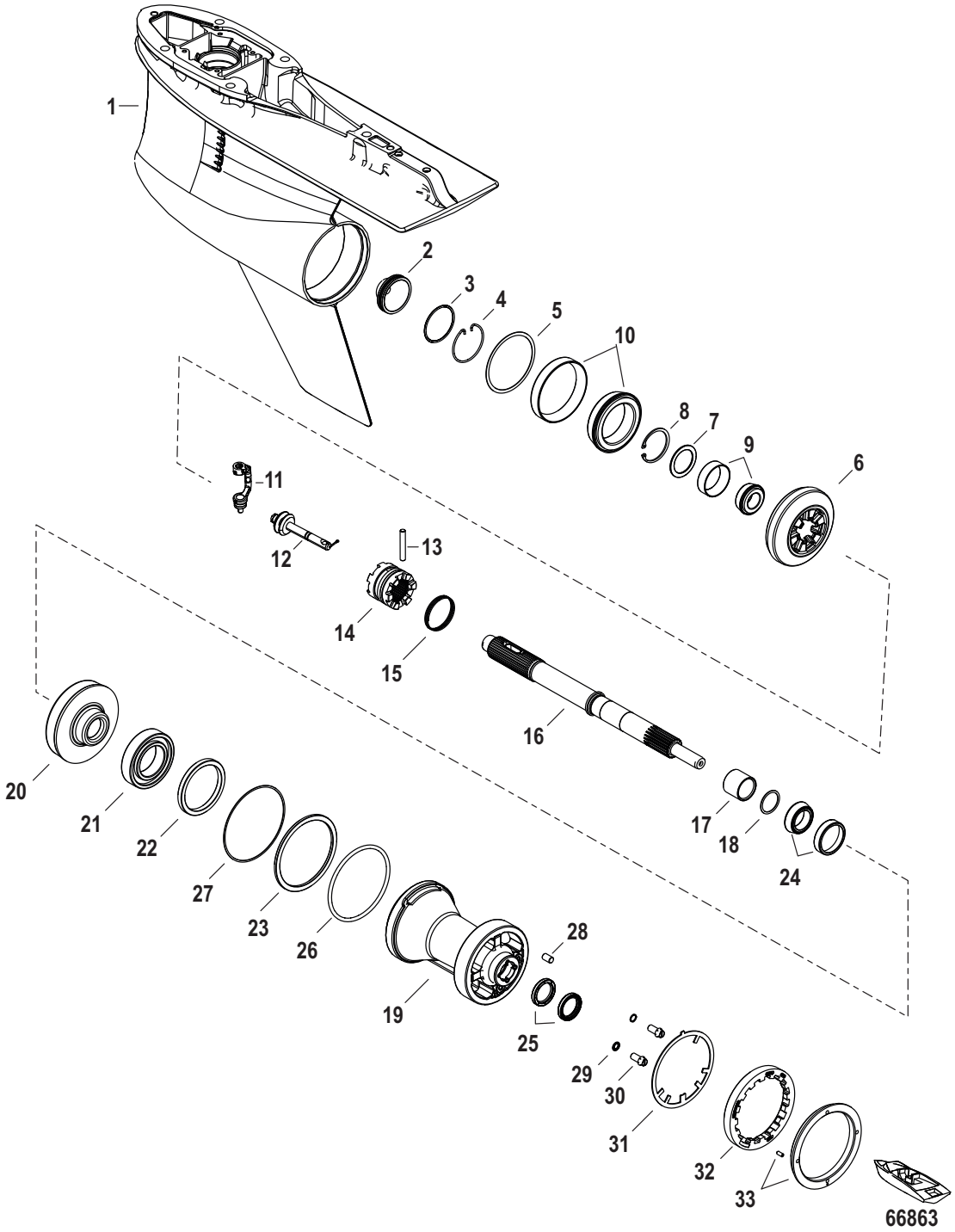

Cat.# 90-8M0145604

Gear Housing, Prop Shaft - Standard Rotation, 5.44 Torpedo

Ref #	Part Class	Part Number	Description	Comments	Qty	Note
-	1600	8M0142309	GEAR HOUSING ASSEMBLY Silver (Standard X-Long) HD 1.75		1	
-	1600	8M0142311	GEAR HOUSING ASSEMBLY Silver (Counter Rotation X-Long) HD 1.75		1	
1	1600	8M0142888	GEAR HOUSING ASSEMBLY Basic, Silver		1	
2	0019	8M0142853	PLUG Torpedo		1	
3	0025	8M0142854	O RING (2.175 x .103)		1	
4	0053	880719	RING Retaining		1	
5	0015	8M0063270	SHIM SET		1	
6	0043	8M0146648	GEAR SET Forward Gear Pinion 12/21	(1.75:1)	1	
7	0012	8M0053823	THRUST WASHER		1	
8	0053	8M0051043	RETAINING RING		1	
9	0031	8M0142835	BEARING Roller Tapered		1	
10	0031	8M0142836	BEARING Roller Tapered		1	
11	0000	8M0046215	CRANK, Shifter 1/4 Pivot Pin		1	
12	0000	8M0142857	SPOOL		1	
13	0017	8M0045493	PIN		1	
14	0052	8M0142871	CLUTCH Sliding 6 Jaw		1	
15	0024	8M0050575	SPRING		1	
16	0044	8M0142877	SHAFT PROPELLER		1	
17	0023	8M0064306	SPACER		1	
18	0015	8M0076745	SHIM SET		1	
18	0012	8M0050423	WASHER .020		AR	
18	0012	8M0050424	WASHER .022		AR	
18	0012	8M0050425	WASHER .024		AR	
18	0012	8M0050427	WASHER .026		AR	
18	0012	8M0050428	WASHER .028		AR	
18	0012	8M0050429	WASHER .030		AR	
18	0012	8M0050430	WASHER .032		AR	
18	0012	8M0050431	WASHER .034		AR	
18	0012	8M0050432	WASHER .036		AR	
18	0012	8M0050433	WASHER .038		AR	
18	0012	8M0050434	WASHER .040		AR	
18	0012	8M0050435	WASHER .042		AR	
18	0012	8M0050436	WASHER .044		AR	
18	0012	8M0050437	WASHER .046		AR	
18	0012	8M0050438	WASHER .048		AR	
18	0012	8M0050439	WASHER .050		AR	
19	0000	8M0146058	BEARING CARRIER ASSEMBLY RH	(1.75)	1	
20	0043	8M0142874	GEAR Reverse	12/21 (1.75:1)	1	
21	0030	8M0142873	BEARING		1	
22	0023	8M0142875	SPACER		1	
23	0012	8M0046569	RING Thrust		1	
24	0031	8M0148319	BEARING Cup/Cone		1	

Gear Housing, Prop Shaft - Standard Rotation, 5.44 Torpedo

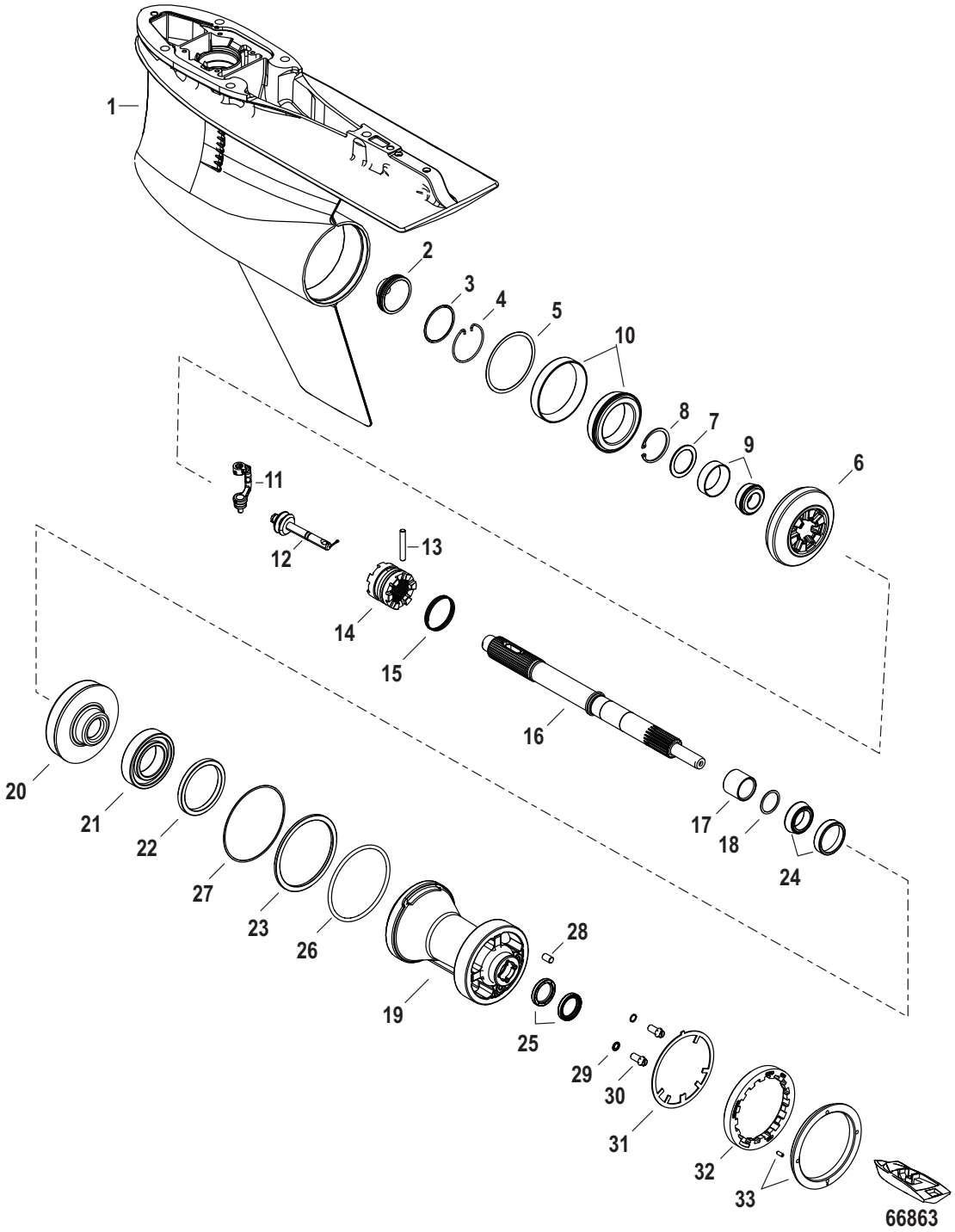

Cat.# 90-8M0145604

Gear Housing, Prop Shaft - Standard Rotation, 5.44 Torpedo

Ref #	Part Class	Part Number	Description	Comments	Qty	Note
25	0026	888483	SEAL Oil		2	
26	0025	8M0000190	O-RING (4.475 x .210)		1	
27	0015	8M0146386	SHIM SET		1	
28	0017	8M0109164	PIN		1	
29	0026	830749	SEAL		2	[1]
30	0010	8M0071653	SCREW Special		2	
31	0014	8M0108527	WASHER Tab		1	[1]
32	0000	8M0111653	NUT Retainer		1	
33	0000	8M0050821	COVER KIT Flush, Standard		1	
-	0026	8M0142979	SEAL KIT		1	

PART NOTES:

[1] - Component of Driveshaft Kit 5.44 8M0146065
Component of Driveshaft Kit 5.44 8M0146066
Component of Driveshaft Kit 5.44 8M0168204
Component of Driveshaft Kit 5.44 8M0168208

Gear Housing, Prop Shaft - Counter Rotation, 5.44 Torpedo

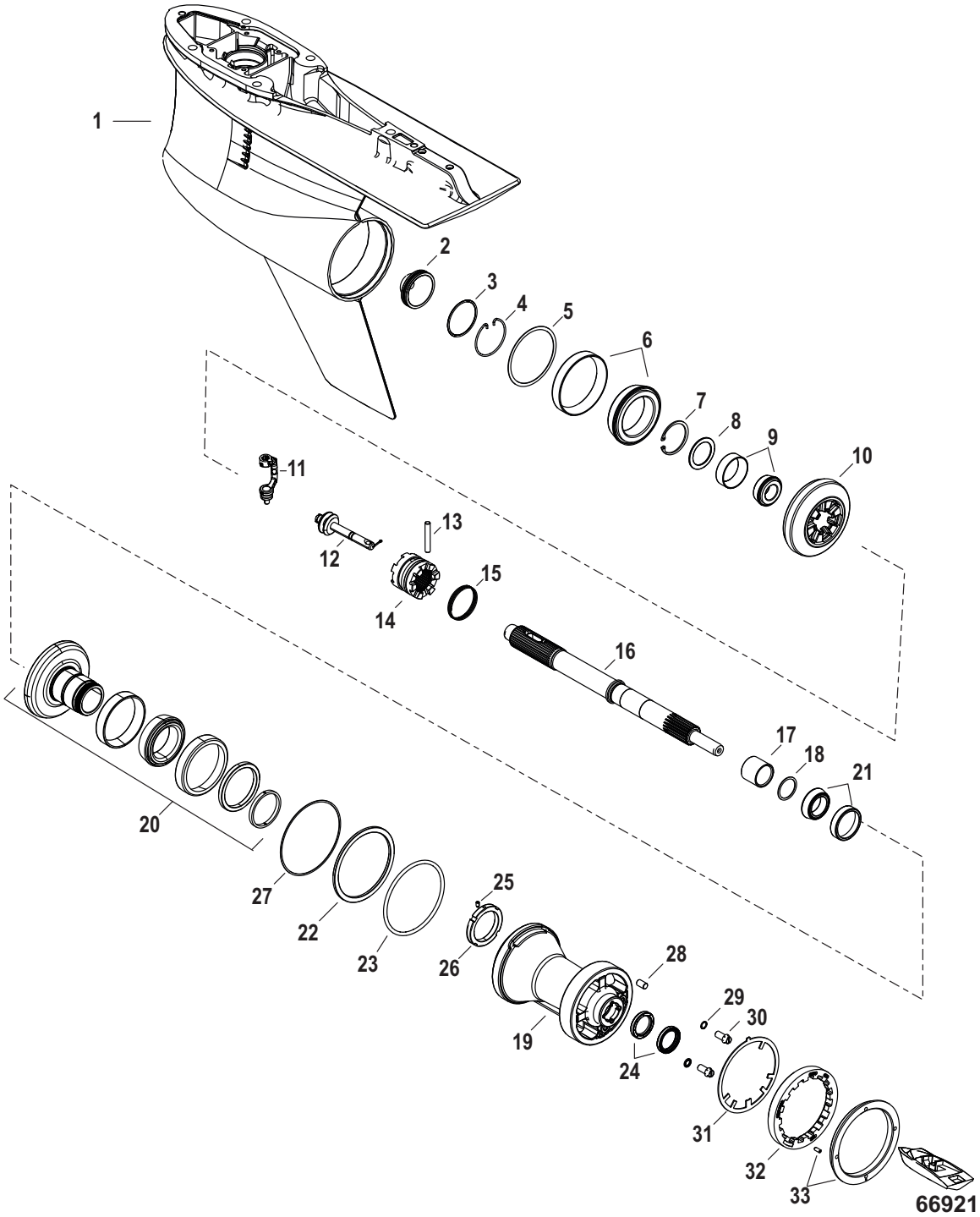

Cat.# 90-8M0145604

Gear Housing, Prop Shaft - Counter Rotation, 5.44 Torpedo

Ref #	Part Class	Part Number	Description	Comments	Qty	Note
-	1600	8M0142309	GEAR HOUSING ASSEMBLY Silver (Standard X-Long) HD 1.75		1	
-	1600	8M0142311	GEAR HOUSING ASSEMBLY Silver (Counter Rotation X-Long) HD 1.75		1	
1	1600	8M0142888	GEAR HOUSING ASSEMBLY Basic, Silver		1	
2	0019	8M0142853	PLUG Torpedo		1	
3	0025	8M0142854	O RING (2.175 x .103)		1	
4	0053	880719	RING Retaining		1	
5	0015	8M0063270	SHIM SET		1	
6	0031	8M0142836	BEARING Roller Tapered		1	
7	0053	8M0051043	RETAINING RING		1	
8	0012	8M0053823	THRUST WASHER		1	
9	0031	8M0142835	BEARING Roller Tapered		1	
10	0043	8M0146676	GEAR Reverse	12/21 (1.75:1)	1	
11	0000	8M0046215	CRANK, Shifter 1/4 Pivot Pin		1	
12	0000	8M0142857	SPOOL		1	
13	0017	8M0045493	PIN		1	
14	0052	8M0142871	CLUTCH Sliding 6 Jaw		1	
15	0024	8M0050575	SPRING		1	
16	0044	8M0142877	SHAFT PROPELLER		1	
17	0023	8M0064306	SPACER		1	
18	0015	8M0076745	SHIM SET		1	
18	0012	8M0050423	WASHER .020		AR	
18	0012	8M0050424	WASHER .022		AR	
18	0012	8M0050425	WASHER .024		AR	
18	0012	8M0050427	WASHER .026		AR	
18	0012	8M0050428	WASHER .028		AR	
18	0012	8M0050429	WASHER .030		AR	
18	0012	8M0050430	WASHER .032		AR	
18	0012	8M0050431	WASHER .034		AR	
18	0012	8M0050432	WASHER .036		AR	
18	0012	8M0050433	WASHER .038		AR	
18	0012	8M0050434	WASHER .040		AR	
18	0012	8M0050435	WASHER .042		AR	
18	0012	8M0050436	WASHER .044		AR	
18	0012	8M0050437	WASHER .046		AR	
18	0012	8M0050438	WASHER .048		AR	
18	0012	8M0050439	WASHER .050		AR	
19	0000	8M0142897	BEARING CARRIER ASSEMBLY LH	(1.75:1)	1	
20	0043	8M0146659	GEAR SET Forward Gear Pinion 12/21	(1.75:1)	1	
21	0031	8M0148319	BEARING Cup/Cone		1	
22	0012	8M0046569	RING Thrust		1	
23	0025	8M0000190	O-RING (4.475 x .210)		1	
24	0026	888483	SEAL Oil		2	

Gear Housing, Prop Shaft - Counter Rotation, 5.44 Torpedo

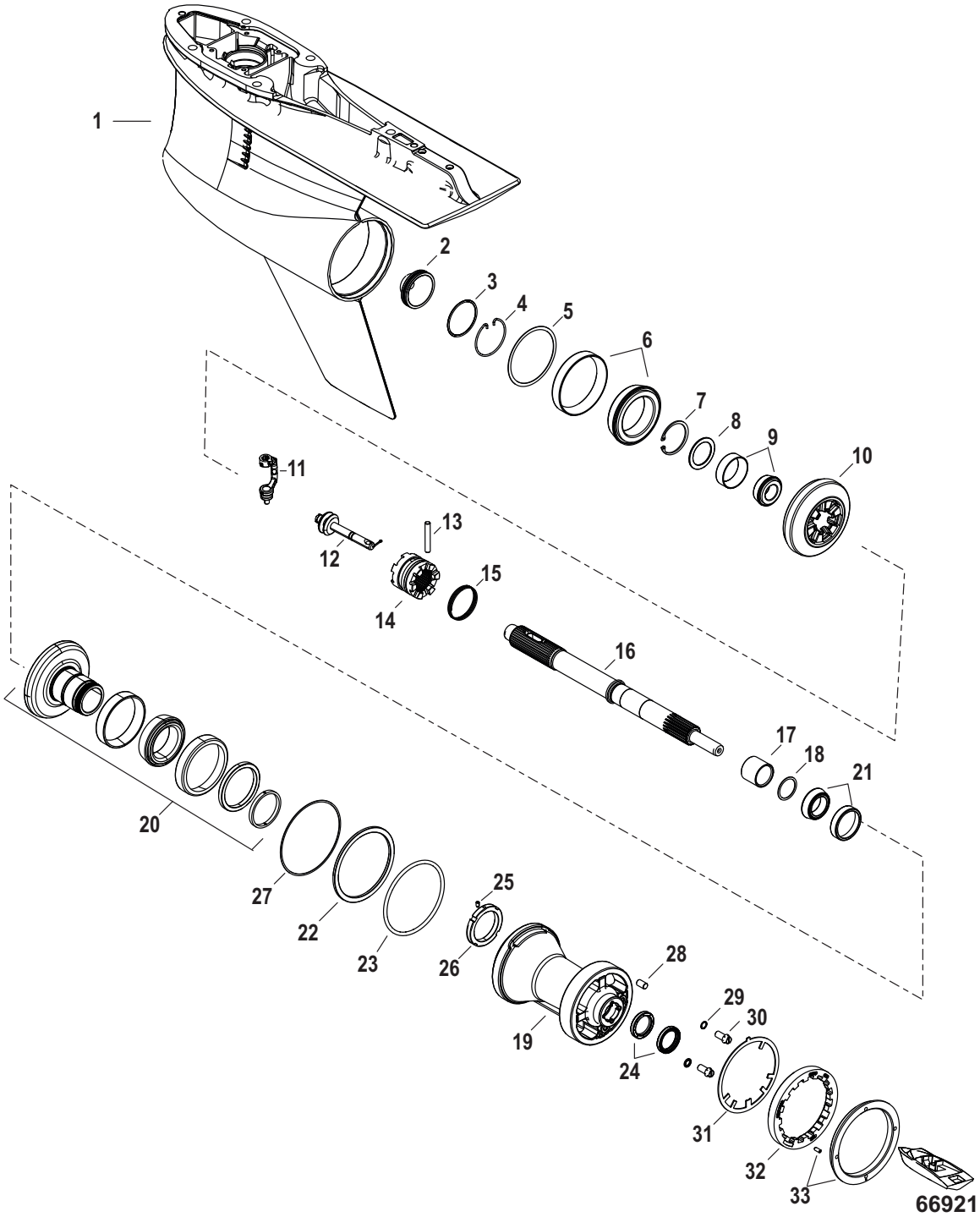

Cat.# 90-8M0145604

Gear Housing, Prop Shaft - Counter Rotation, 5.44 Torpedo

Ref #	Part Class	Part Number	Description	Comments	Qty	Note
25	0010	8M0066130	SCREW- HALF DOG POINT SET		1	
26	0011	8M0064178	LOCK NUT		1	
27	0015	8M0146386	SHIM SET		1	
28	0017	8M0109164	PIN		1	
29	0026	830749	SEAL		2	[1]
30	0010	8M0071653	SCREW Special		2	
31	0014	8M0108527	WASHER Tab		1	[1]
32	0000	8M0111653	NUT Retainer		1	
33	0000	8M0050821	COVER KIT Flush, Standard		1	
-	0026	8M0142979	SEAL KIT		1	

PART NOTES:

[1] - Component of Driveshaft Kit 5.44 8M0146065
Component of Driveshaft Kit 5.44 8M0146066
Component of Driveshaft Kit 5.44 8M0168204
Component of Driveshaft Kit 5.44 8M0168208

Gear Housing, Driveshaft, Torque Master

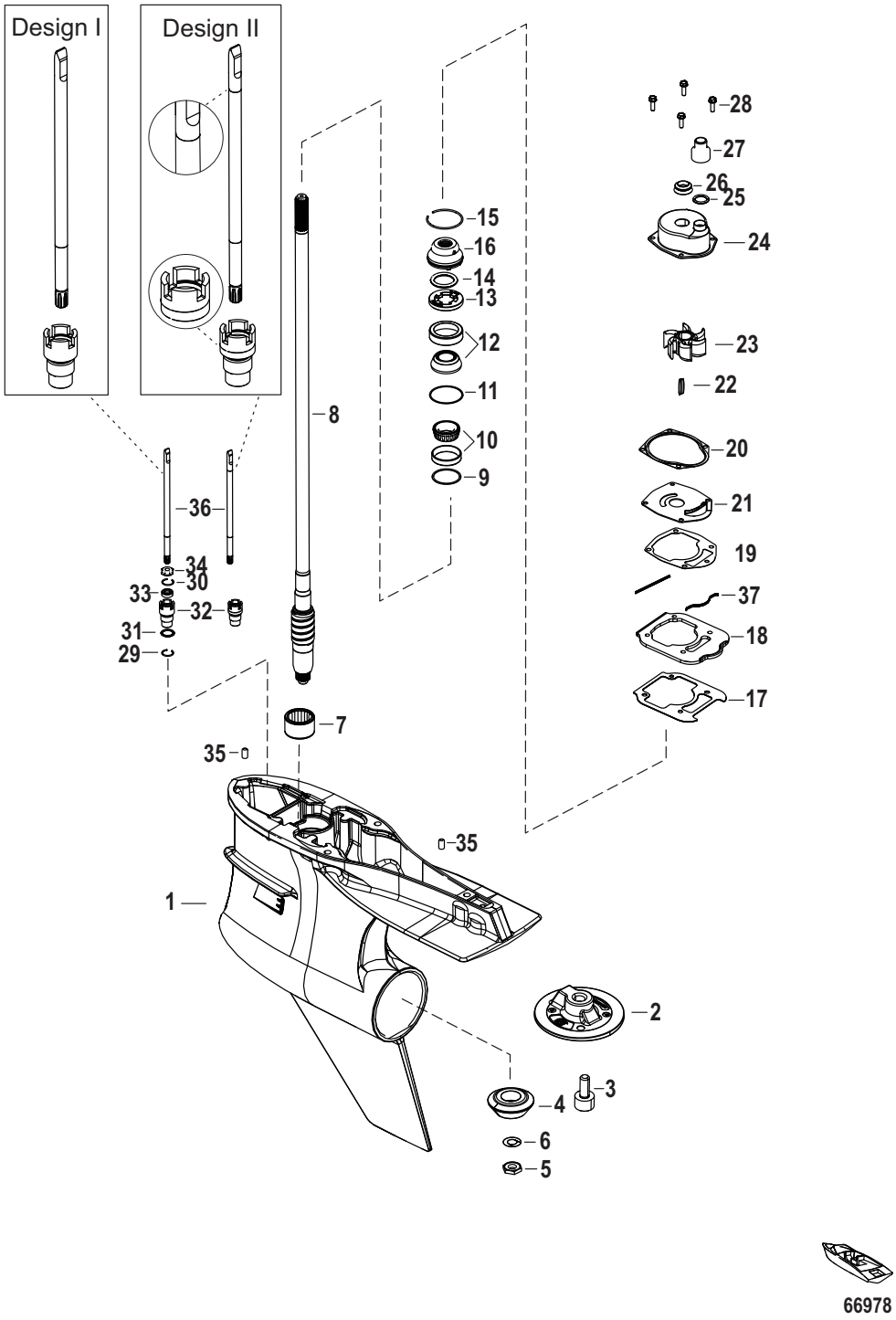

Cat.# 90-8M0145604

Gear Housing, Driveshaft, Torque Master

Ref #	Part Class	Part Number	Description	Comments	Qty	Note
-	1600	8M0142316	GEAR HOUSING ASSEMBLY Silver (Standard Long) (1.75) (Torque Master)		1	
1	1600	8M0142852	GEAR HOUSING ASSEMBLY Basic, Silver (Torque Master)		1	
2	0000	8M0142847	PLATE Anodic		1	
3	0010	8M0142850	SCREW (M10 X 25)		1	
4	0043	8M0146696	GEAR SET Forward Pinion 12/21	(1.75:1) Forward and Pinion	1	
5	0011	8M0071654	NUT (.625-18 HX)		1	
6	0012	92721	WASHER		1	
7	0031	42647A1	BEARING ASSEMBLY Roller		1	
8	0045	8M0146944	DRIVESHAFT ASSEMBLY Cup/Cone		1	
9	0015	8M0063268	SHIM SET		1	
10	0031	8M0146553	BEARING ASSEMBLY Cup/Cone		1	
11	0015	8M0063267	SHIM SET		1	
12	0031	8M0146566	BEARING ASSEMBLY Cup/Cone		1	
13	0000	8245191	RETAINER		1	
14	0025	8M0142854	O RING (2.175 x .103)		1	
15	0053	880719	RING Retaining		1	
16	0000	8M0046297	OIL SEAL CARRIER ASSEMBLY		1	
17	0027	8M0146938	GASKET Water Pump Base		1	
18	0000	8M0142869	COVER HOUSING Gearcase		1	
19	0027	8M0142616	GASKET Face Plate to Gearcase		1	
20	0027	8172771	GASKET		1	
21	0000	8172761	FACEPLATE		1	
22	0028	8M0032833	KEY		1	
23	0047	43026T2	IMPELLER		1	[1]
24	0000	817275A1	HOUSING KIT Water Pump		1	
25	0025	21836	O-RING (.796 x .139)		1	
26	0026	8M0142851	VRING Face Seal		1	
27	0000	8M0142435	COUPLING Water Pump		1	
28	0010	1993720	SCREW (M6 x 20)		4	
29	0053	8M0142866	RING Retaining		1	
30	0053	8M0046563	RETAINING RING		1	
31	0025	8M0142860	O-RING		1	
32	0023	8M0142859	BUSHING Shift Shaft	Design I	1	
32	0023	8M0164967	BUSHING Shift Shaft	Design II	1	
33	0026	8164641	SEAL Oil		1	
34	0012	77674	WASHER		1	
35	0017	8M0084244	PIN Dowel		2	
36	0000	8M0142858	SHIFT SHAFT Long	Design I	1	
36		8M0164968	SHIFT SHAFT Long Includes Bushing Design II	Design II	1	
37	0025	8M0142659	SEAL		1	
-	0026	8M0142979	SEAL KIT		1	

Gear Housing, Driveshaft, Torque Master

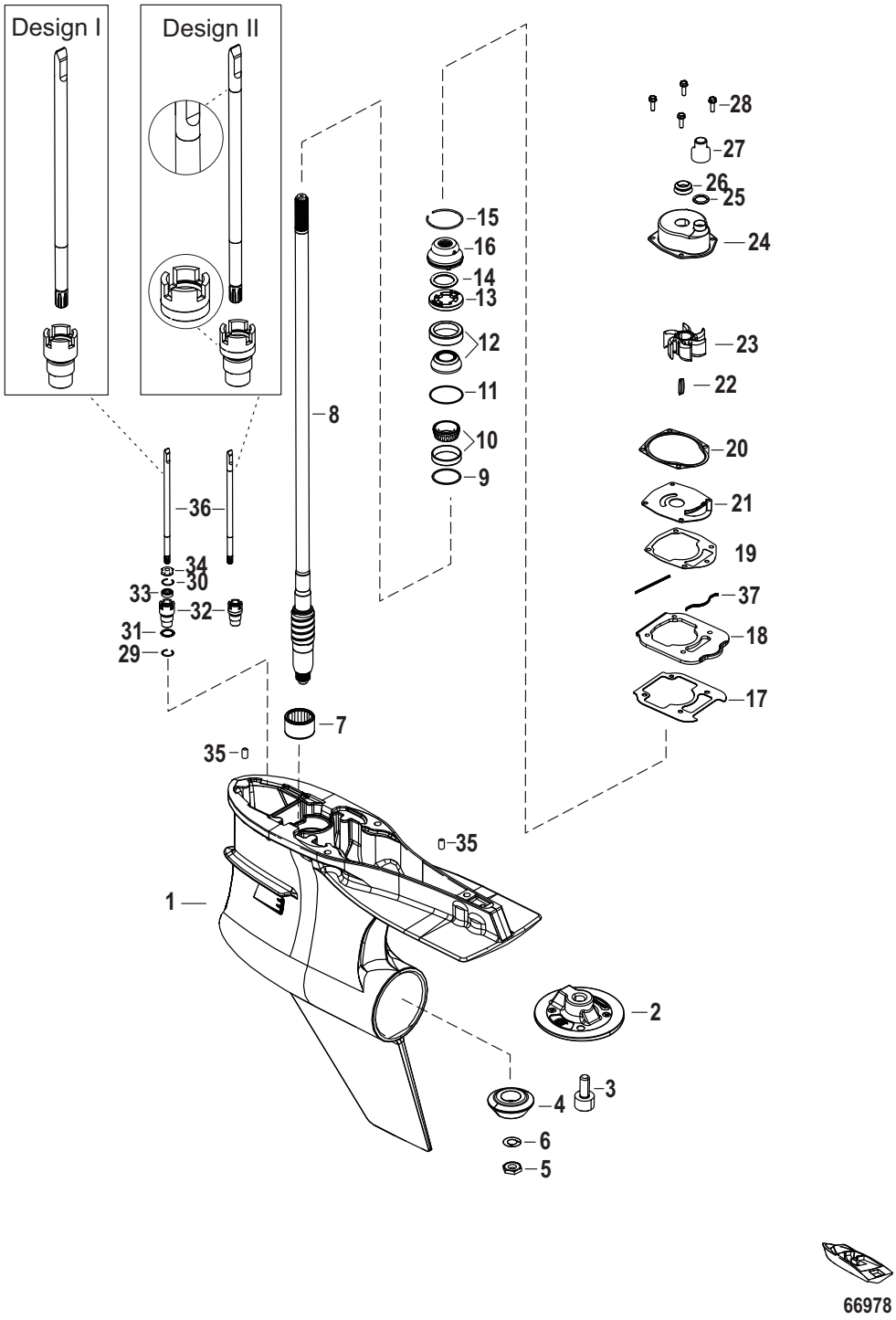

Cat.# 90-8M0145604

Gear Housing, Driveshaft, Torque Master

PART NOTES:

[1] - Alternate part numbers:

43026Q02QS

43026T 2Service Part

Gear Housing Prop Shaft-Standard Rotation,Torque Master

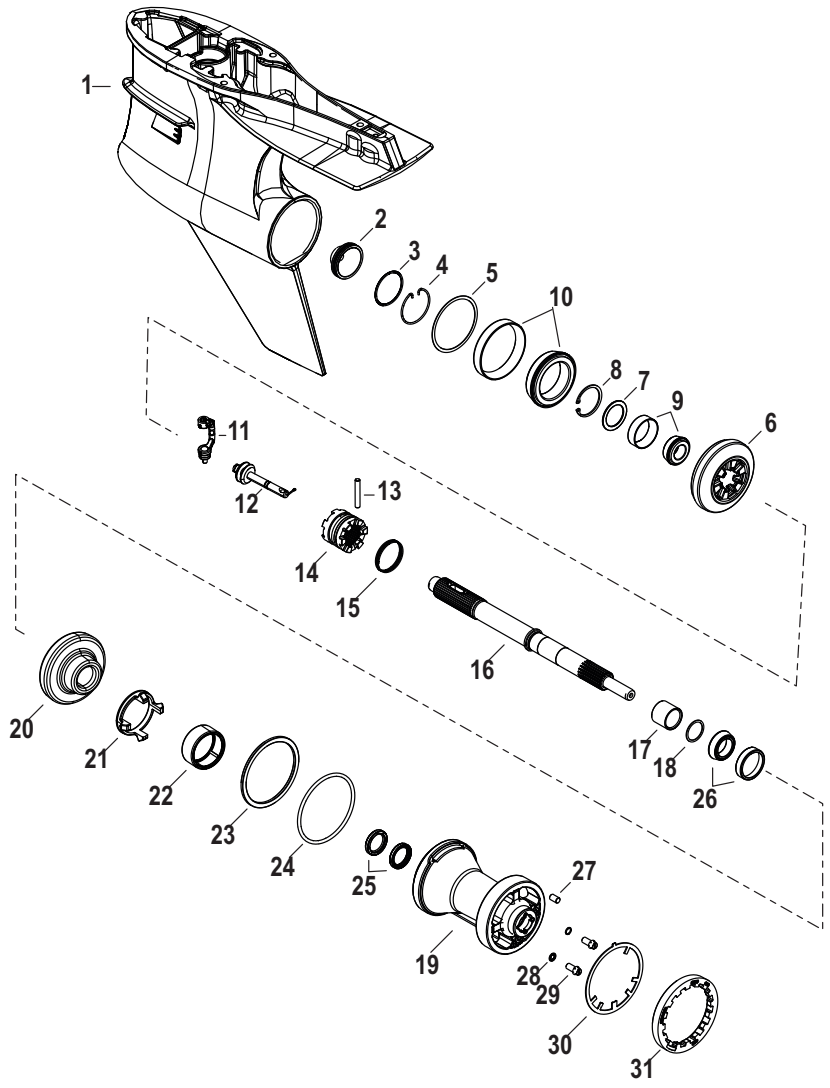

66995

Cat.# 90-8M0145604

Gear Housing Prop Shaft-Standard Rotation,Torque Master

Ref #	Part Class	Part Number	Description	Comments	Qty	Note
-	1600	8M0142316	GEAR HOUSING ASSEMBLY Silver (Standard Long) (1.75) (Torque Master)		1	
1	1600	8M0142852	GEAR HOUSING ASSEMBLY Basic, Silver (Torque Master)		1	
2	0019	8M0142853	PLUG Torpedo		1	
3	0025	8M0142854	O RING (2.175 x .103)		1	
4	0053	880719	RING Retaining		1	
5	0015	8M0063270	SHIM SET		1	
6	0043	8M0146696	GEAR SET Forward Pinion 12/21	(1.75:1)	1	
7	0012	8M0053823	THRUST WASHER		1	
8	0053	8M0051043	RETAINING RING		1	
9	0031	8M0142835	BEARING Roller Tapered		1	
10	0031	8M0142836	BEARING Roller Tapered		1	
11	0000	8M0046215	CRANK, Shifter 1/4 Pivot Pin		1	
12	0000	8M0142857	SPOOL		1	
13	0017	8M0045493	PIN		1	
14	0052	8M0142849	CLUTCH Sliding		1	
15	0024	8M0050575	SPRING		1	
16	0044	8M0142838	PROPELLER SHAFT		1	
17	0023	8M0064306	SPACER		1	
18	0015	8M0076745	SHIM SET		1	
18	0012	8M0050423	WASHER .020		AR	
18	0012	8M0050424	WASHER .022		AR	
18	0012	8M0050425	WASHER .024		AR	
18	0012	8M0050427	WASHER .026		AR	
18	0012	8M0050428	WASHER .028		AR	
18	0012	8M0050429	WASHER .030		AR	
18	0012	8M0050430	WASHER .032		AR	
18	0012	8M0050431	WASHER .034		AR	
18	0012	8M0050432	WASHER .036		AR	
18	0012	8M0050433	WASHER .038		AR	
18	0012	8M0050434	WASHER .040		AR	
18	0012	8M0050435	WASHER .042		AR	
18	0012	8M0050436	WASHER .044		AR	
18	0012	8M0050437	WASHER .046		AR	
18	0012	8M0050438	WASHER .048		AR	
18	0012	8M0050439	WASHER .050		AR	
19	0000	8M0142839	BEARING CARRIER		1	
20	0043	8M0142841	GEAR Reverse		1	
21	0000	8M0142846	RETAINER GEAR		1	
22	0031	8M0142843	BEARING NEEDLE		1	
23	0000	880699	THRUST RING		1	
24	0025	8M0142840	O-RING (3.85 x 0.210)		1	
25	0026	888483	SEAL Oil		2	
26	0031	8M0148319	BEARING Cup/Cone		1	
27	0017	8M0109164	PIN		1	

Gear Housing Prop Shaft-Standard Rotation,Torque Master

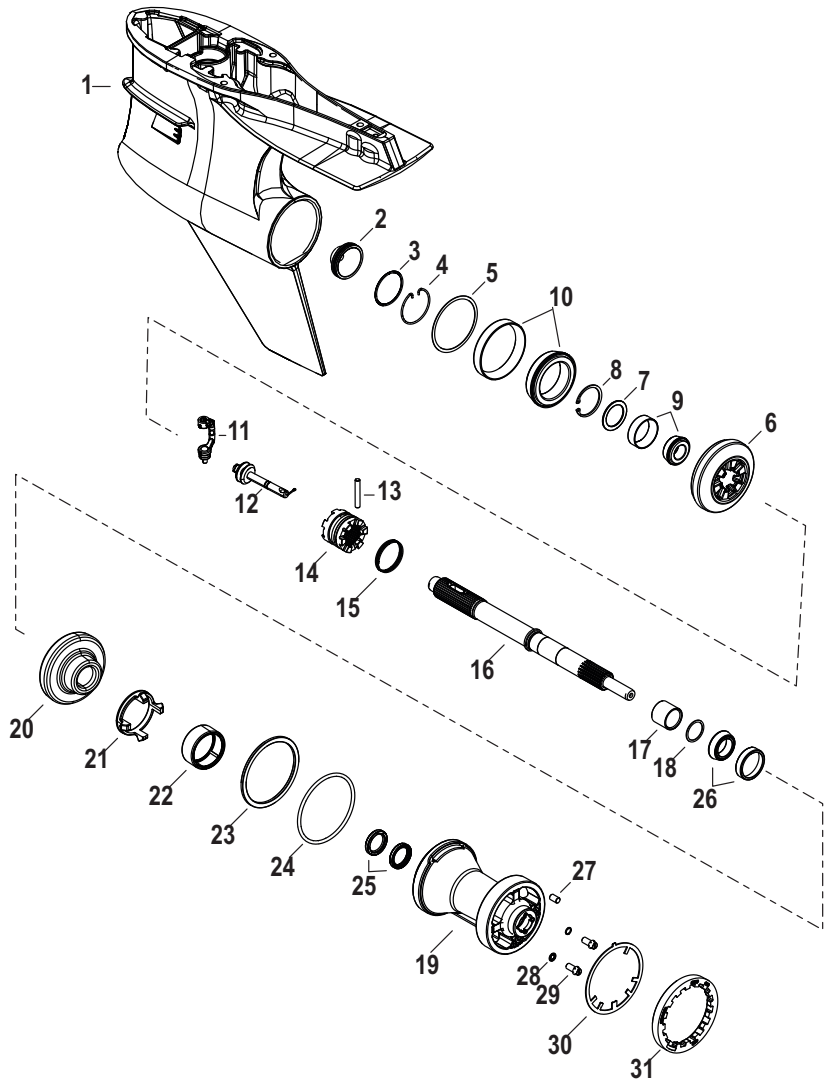

66995

Cat.# 90-8M0145604

Gear Housing Prop Shaft-Standard Rotation,Torque Master

Ref #	Part Class	Part Number	Description	Comments	Qty	Note
28	0026	830749	SEAL		2	
29	0010	8M0071653	SCREW Special		2	
30	0014	8M0142855	TAB WASHER		1	
31	0000	8M2000347	RETAINER		1	
-	0026	8M0142979	SEAL KIT		1	

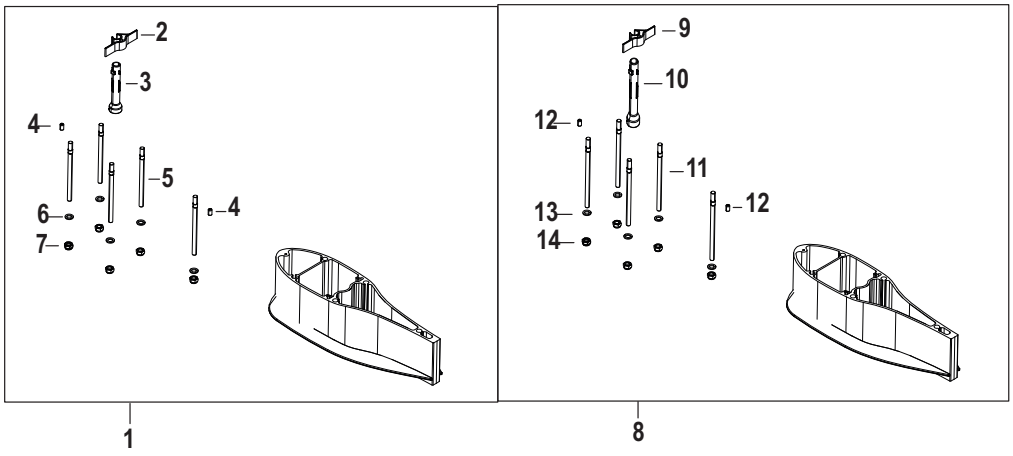

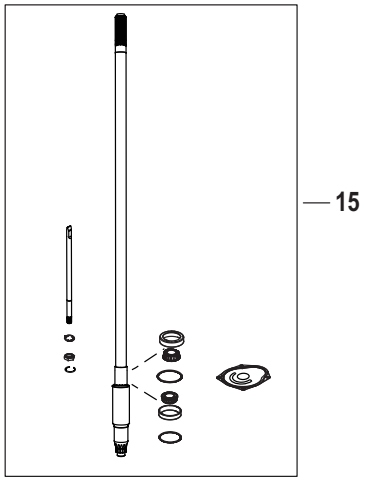

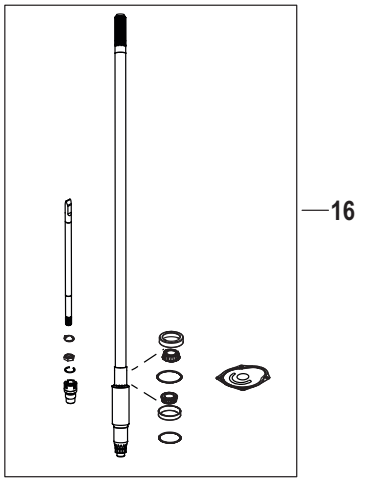

67125

Cat.# 90-8M0145604

Driveshaft Extension Kits

Ref #	Part Class	Part Number	Description	Comments	Qty	Note
1	0000	8M0142779	SPACER ASSEMBLY 5 IN Black		1	
1	0000	8M0147047	SPACER ASSEMBLY 5 IN Silver		1	
2	0000	8M0042271	GUIDE Water Tube		1	
3	0000	8M0142780	TUBE Water		1	
4	0017	8M0084244	PIN Dowel		2	
5	0016	8M0142781	STUD (M12 x 179)		5	
6	0012	856982	WASHER (.500 x .810 x .090) Stainless Steel		5	
7	0011	896895	NUT (M12)		5	
8	0000	8M0142787	SPACER ASSEMBLY 10 IN Black		1	
8	0000	8M0147046	SPACER ASSEMBLY 10 IN Silver		1	
9	0000	8M0042271	GUIDE Water Tube		1	
10	0000	8M0142789	WATER TUBE		1	
11	0016	8M0142788	STUD (M12 x 306)		5	
12	0017	8M0084244	PIN Dowel		2	
13	0012	856982	WASHER (.500 x .810 x .090) Stainless Steel		5	
14	0011	896895	NUT (M12)		5	
15	0045	8M0146062	DRIVESHAFT KIT Long	4.80	1	
15	0045	8M0146065	DRIVESHAFT KIT Long	5.44	1	
15	0045	8M0146066	DRIVESHAFT KIT X-Long	5.44	1	
16	0045	8M0168203	DRIVESHAFT KIT Long	4.80	1	
16	0045	8M0168204	DRIVESHAFT KIT Long	5.44	1	
16	0045	8M0168208	DRIVESHAFT KIT X-Long	5.44	1	

Cat.# 90-8M0145604

Accessories

Ref #	Part Class	Part Number	Description	Comments	Qty	Note
-	0000	893395A01	PLATE Flush Mount		1	
-	0022	875207	TEE Fitting		1	
-	0000	892486K08	CONVERSION KIT Analog		1	
-	0084	899785K04	HARNESS ASSEMBLY Accessory Power (30 Feet)		1	
-	0010	880717A01	SCREW/SEAL KIT Gearcase		1	
-	0084	88439A50	CABLE SET Battery		1	
-	0084	8M0133542	CABLE KIT (12 ft) Battery		1	
-	0000	44357Q2	FLUSHING ATTACHMENT	(Quicksilver)	1	[1]
-	0000	44357T2	FLUSHING ATTACHMENT	(Mercury Precision Parts)	1	[1]
-	0000	881150Q1	FLUSH KIT Dual Water Pick Up	(Quicksilver)	1	[2]
-	0000	881150K1	SEAL KIT Flush - Dual Water Pickup	(Mercury Precision Parts)	1	[2]
-	0000	899712A01	CABLE KIT Continuity		1	
-	0000	8M0133491	TILLER HANDLE ASSEMBLY Big Tiller Mechanical/Power Steer		1	
-	0000	8M0133492	TILLER HANDLE ASSEMBLY Big Tiller - DTS with Power Steer		1	
-	0000	8M0141907	CABLE KIT - THROTTLE AND SHIFT GEN II		1	
-	0000	8M0131810	MP ALERT COWL KIT (Chrome Bezel)		1	
-	0000	8M0072341	BEZEL MP Alert - Oval (Chrome)		1	
-	0000	8M0138978	BEZEL MP Alert (Warm Fusion White)		1	
-	0000	8M0143359	SOUND CONTROL KIT Advanced	AMS Only	1	
-	0000	8M0142265	SENSOR Oil Level		1	
-	0084	8M0145987	HARNESS KIT Re-power Plan		1	
-	0071	8M0142696	SENSOR Pressure	DTS	1	
-	0000	8M0145165	BLOCK WATER PRESSURE KIT Analog	Mechanical	1	
-	0025	8M0146953	GROMMET Large Hole, Mechanical		1	
-	0025	8M0146954	GROMMET Large Hole, DTS CMS		1	
-	0025	8M0146955	GROMMET Large Hole, DTS		1	
-	0032	825191A03	HOSE KIT Rigging		1	
-	0035	8M0135386	FUEL FILTER KIT Boat Mounted		1	
-	0035	8M0126144	FUEL FILTER		1	
-	0084	8M0113732	HARNESS ASSEMBLY DTS, Clean Power, 14 Feet		1	
-	0084	889244T01	HARNESS ASSEMBLY DTS Clean Power (25 Feet)		1	
-	0084	8M0127682	POWER HARNESS ASSEMBLY Helm (15 feet)		1	
-	0084	8M0127681	POWER HARNESS ASSEMBLY Helm (10 feet)		1	
-	0084	896333T25	HARNESS ASSEMBLY (25 Feet)		1	
-	0067	896305001	BRACKET		1	
-	0067	896392	WASHER		1	
-	0010	67755A22	BOLT KIT Transom (2.50 Inch)		1	
-	0010	67755A26	BOLT KIT Transom (3.50 Inch)		1	

Cat.# 90-8M0145604

Accessories

Ref #	Part Class	Part Number	Description	Comments	Qty	Note
-	0000	67755A13	BOLT KIT Transom (4.50 Inch)		1	
-	0010	67755A14	BOLT KIT Transom (5.50 Inch)		1	
-	0010	67755A15	BOLT KIT Transom (6.50 Inch)		1	
-	0010	67755A17	BOLT KIT Transom (7.50 Inch)		1	
-	0010	67755A18	BOLT KIT Transom (8.00 Inches)		1	
-	0010	8M0149614	BOLT KIT Transom (8.00 Inches)	Two Bolts	1	
-	0011	8M0109756	DOUBLE NUT KIT Transom Bolt		1	
-	0012	28421	WASHER (1.5 x 3.05 x 0.13) Stainless Steel		1	
-	0012	895062	WASHER		1	
-	0011	82671117	NUT (.500-20)		1	
-	0079	8M0097226	TACHOMETER KIT Helm Mount		1	
-	0022	8M0150994	FITTING CONNECTOR KIT		1	

PART NOTES:

[1] - Alternate part numbers:

44357A 2Service Part

44357Q 2QS

44357T 2MPP

[2] - Alternate part numbers:

881150K 1MPP

881150Q 1QS

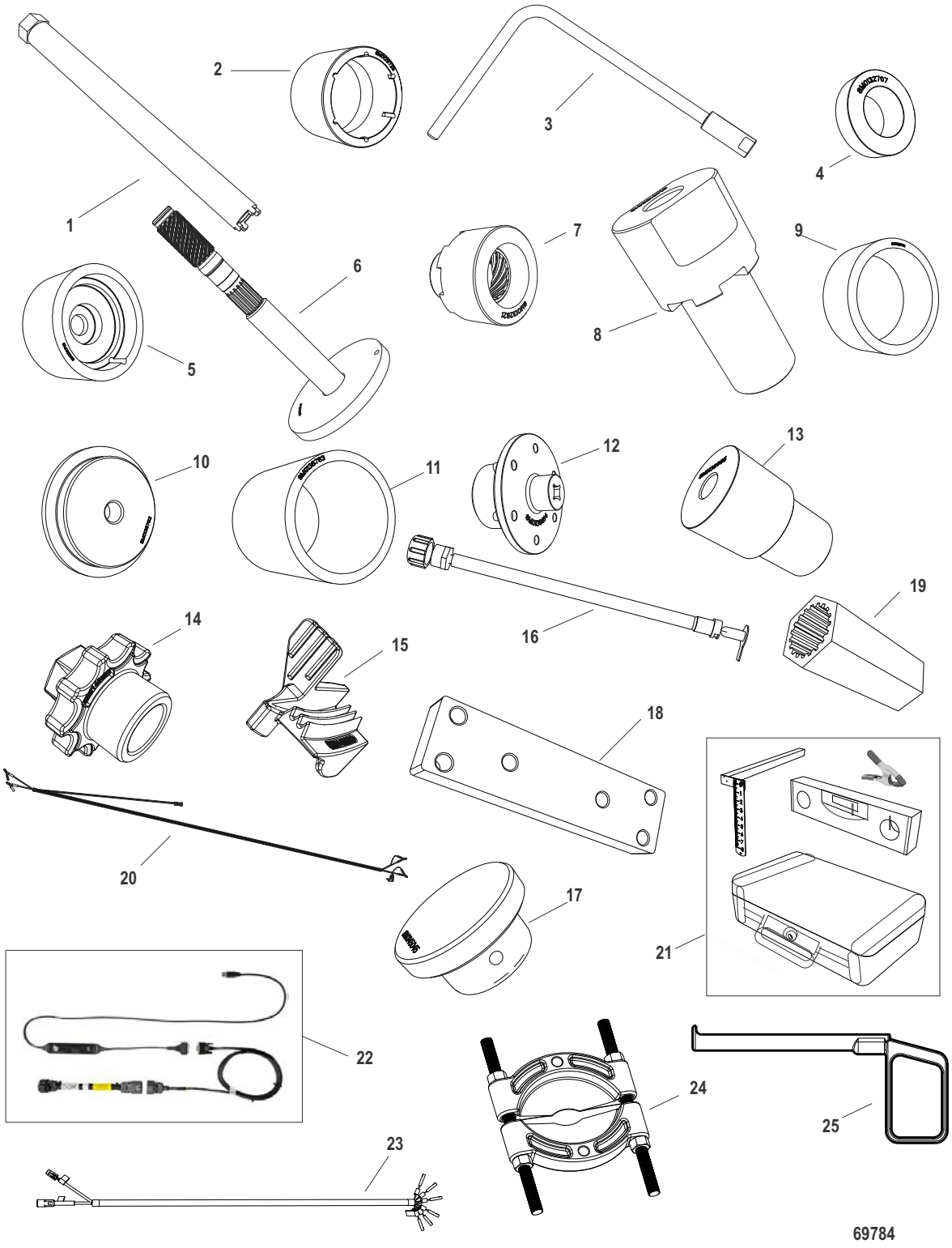
1
2
3
4
5
6
7
8
9
10
11
12
13
14
15
16
17
18
19
20
21
22
23
24
25
69784

Cat.# 90-8M0145604

Tools

Ref #	Part Class	Part Number	Description	Comments	Qty	Note
1	0091	8M0142969	SHIFT SHAFT TOOL		1	
2	0091	8M0142970	ALIGNMENT TOOL Preload Driver		1	
3	0091	8M0142973	SHIFT SHAFT HANDLE TOOL		1	
4	0091	8M0142974	RETAINER PRESS FIXTURE		1	
5	0091	8M0142976	TOOL Press Fixture Base		1	
6	0091	8M0142983	SHAFT TOOL Bearing Carrier Assembly		1	
7	0091	8M0145393	TOOL Threaded Clutch Assembly		1	
8	0091	8M0142559	HOLDING FIXTURE Gear Assembly		1	
9	0091	8M0142615	MANDREL Press Spacer		1	
10	0091	8M0142624	GUIDE PLATE Bearing Carrier		1	
11	0091	8M0142413	MANDREL Rear Gear Bearing Cone		1	
12	0091	8M0142414	TOOL Gear Assembly Driver		1	
13	0091	8M0142636	BEARING MANDREL		1	
14	0091	8M0146861	TOOL Flywheel		1	
15	0091	8M0146862	TOOL Stretch Belt		1	
16	0032	8M0129230	HOSE Oil Drain		1	
17	0091	8M0146935	INSTALLATION TOOL Bearing Spool		1	
18	0091	8M0146936	BAR MOUNT PULLER Upper		1	
19	0091	8M0147118	TOOL Propshaft		1	
20	0091	8M0147078	INSTALLATION TOOL Trim Harness		1	
21	0091	8M0130705	GEARCASE HEIGHT TOOL KIT		1	
22	0091	8M0138392	DIAGNOSTIC TOOL KIT CDS -G3		1	
23	0091	8M0150597	TOOL-SHIFT ACTUATOR Test TEE Harness		1	
24	0091	8M0160428	PULLER PLATE		1	
25	0091	8M0163293	TOOL Chip Catcher		1	
NS	0091	883705T01	STRAP TOOL Engine Lifting		1	
NS	0091	98234A2	DRILL FIXTURE KIT Transom		1	
NS	0091	8M0147671	TOOL ALIGNMENT PIN UPPER MOUNT		1	
NS	0091	8M0145607	TOOL Bar Puller		1	
NS	0091	8M0147116	TOOL GUIDE SEAL DRIVER		1	
NS	0091	8M0149553	TOOL Upper Mount Rod Installation		1	
NS	0091	8M0148868	WRENCH AMS Mount		1	
NS	0091	8M0148865	TOOL Install Gear		1	

Cat.# 90-8M0145604

Maintenance Kits

Ref #	Part Class	Part Number	Description	Comments	Qty	Note
-	0000	8M0149929	100 HR MAINTENANCE KIT V6 and V8 4 stroke		1	
-	0035	8M0123025	OIL FILTER		1	
-	0035	8M0106635	FUEL FILTER		1	
-	0026	830749	SEAL		1	
-	0000	8M0149931	MAINTENANCE KIT V8 CMS/Seapro/ProXS (300 Hr)		1	
-	0035	8M0123025	OIL FILTER		1	
-	0035	8M0106635	FUEL FILTER		1	
-	0026	830749	SEAL		2	
-	0033	8M0135348	SPARK PLUGS		8	
-	0000	8M0162139	THERMOSTAT ASSEMBLY		1	
-	0054	888988008	CLAMP (34.6 MM)		1	
-	0057	8M0142251	BELT		1	
-	0047	8M0142980	IMPELLER REPAIR KIT		1	
-	0097	8M0137814	ANODE ANTIVENT PLATE		1	
-	0010	8M0142850	SCREW (M10 X 25)		2	
-	0019	8M0142878	PLUG Screw		2	
-	0097	818298Q1	ANODE KIT		1	[1]

PART NOTES:

[1] - Alternate part numbers:

818298A 1Service Part

818298Q 1QS

818298T 1MPP

818298T 3Magnesium

8M0059343Bulk Pack

Part No.	Description	Pg.	Ref.no
1993720	SCREW (M6 x 20)	70	31
1993720	SCREW (M6 x 20)	90	28
201951	O-RING (.487 x .103)	60	22
21836	O-RING (.796 x .139)	78	28
22740	CLIP	64	18
26996	LOCKWASHER (#10) Stainless Steel	62	11
29245	WASHER (.281 x .500 x .060) Stainless Steel	64	28
35480	O-RING (1.237 x .103)	42	2
4000330	SCREW (M6 x 25)	64	9
40011106	SCREW (M5 x 13) Stainless Steel	16	2
40011106	SCREW (M5 x 13) Stainless Steel	68	15
40011126	SCREW (M6 x 13) Stainless Steel	22	6
40011148	SCREW (M8 x 20)	22	19
4002319	WASHER	64	4
4002319	WASHER	66	21
400257	LOCKWASHER (M8)	22	14
4010730	SCREW (M8 x 30)	46	9
401388	NUT (M8) Stainless Steel	22	17
42118	WASHER	18	51
42647A1	BEARING ASSEMBLY Roller	90	7
43026T2	IMPELLER	70	25
43026T2	IMPELLER	90	23
44357Q2	FLUSHING ATTACHMENT	100	-
46335	NUT (.375-24)	62	16
65567	WASHER (.265 x .750 x .048) Stainless Steel	16	17
65830	NYLINER	64	8
67755A13	BOLT KIT Transom (4.50 Inch)	102	-
67755A15	BOLT KIT Transom (6.50 Inch)	102	-
67755A18	BOLT KIT Transom (8.00 Inches)	102	-
67755A26	BOLT KIT Transom (3.50 Inch)	100	-
74036	FITTING Grease	62	8
77674	WASHER	78	37
811613	PLUG ASSEMBLY	66	15
815432	WASHER (.562 x 2.00 x .125)	62	27
816311T	TIE STRAP (8.00 Inches)	16	28
816311T	TIE STRAP (8.00 Inches)	46	23
816432	THRUST WASHER	62	3
8164641	SEAL Oil	78	36
817275A1	HOUSING KIT Water Pump	70	26
817275A1	HOUSING KIT Water Pump	90	24
8172761	FACEPLATE	78	23
8172771	GASKET	70	22
8172771	GASKET	90	20
818298Q1	ANODE KIT	106	-
821207	BUSHING	64	24
821539	PIN Trilobe	64	23
8245191	RETAINER	78	14
82494830	SCREW (M6 x 30)	66	2
825191A03	HOSE KIT Rigging	100	-
826164	NUT (.875-14)	64	20
830749	SEAL	76	28
830749	SEAL	88	29
830749	SEAL	106	-
830899	SPRING Tension	62	7
83296910	FUSE Mini - Red - 10 Ampere	18	48
832969T20	FUSE Mini - Yellow - 20 Ampere	18	48
847541	WASHER	62	22
852368	SCREW (#10-24 x .750)	62	10
856954	BUSHING	16	17
856982	WASHER (.500 x .810 x .090) Stainless Steel	68	17
856982	WASHER (.500 x .810 x .090) Stainless Steel	98	13
1993720	SCREW (M6 x 20)	78	31
201951	O-RING (.487 x .103)	42	11
21836	O-RING (.796 x .139)	70	28
21836	O-RING (.796 x .139)	90	25
26317	O-RING	42	26
28421	WASHER (1.5 x 3.05 x 0.13) Stainless Steel	102	-
29845	O-RING (.924 x .103)	42	29
4000327	SCREW (M6 x 14)	66	16
4000330	SCREW (M6 x 25)	64	29
40011106	SCREW (M5 x 13) Stainless Steel	48	23
40011107	SCREW (M5 x 16) Stainless Steel	26	6
40011145	SCREW (M8 x 10) Stainless Steel	22	12
4002315	WASHER (6.60 X 12.5 X 1.5 mm -SS)	66	17
4002319	WASHER	64	25
400256	LOCKWASHER (M6)	66	3
4010620	SCREW (M6 x 20) Stainless Steel	26	2
401386	NUT (M6) Stainless Steel	4	20
401388	NUT (M8) Stainless Steel	24	3
42647A1	BEARING ASSEMBLY Roller	70	8
42975	DRIVE SCREW	26	4
43026T2	IMPELLER	78	25
43430	WASHER	22	7
44357T2	FLUSHING ATTACHMENT	100	-
58643	LOCKWASHER (.375)	62	14
65567	WASHER (.265 x .750 x .048) Stainless Steel	32	2
67684	RING Retaining	62	18
67755A14	BOLT KIT Transom (5.50 Inch)	102	-
67755A17	BOLT KIT Transom (7.50 Inch)	102	-
67755A22	BOLT KIT Transom (2.50 Inch)	100	-
73286	SCREW (.250-20 x .500) Stainless Steel	62	15
77674	WASHER	70	37
77674	WASHER	90	34
813771003	MOUNT Lower	62	25
816311T	TIE STRAP (8.00 Inches)	16	28
816311T	TIE STRAP (8.00 Inches)	42	13
816311T	TIE STRAP (8.00 Inches)	60	14
8164641	SEAL Oil	70	36
8164641	SEAL Oil	90	33
817275A1	HOUSING KIT Water Pump	78	26
8172761	FACEPLATE	70	23
8172761	FACEPLATE	90	21
8172771	GASKET	78	22
818298Q1	ANODE KIT	64	27
81893435	SCREW (M8 x 35)	62	23
821327	PIN Dowel	46	6
8245191	RETAINER	70	14
8245191	RETAINER	90	13
825190	WASHER	62	31
825677	PUSH NUT	26	10
82671117	NUT (.500-20)	102	-
830749	SEAL	84	29
830749	SEAL	96	28
830749	SEAL	106	-
830900	SPRING Compression	64	7
8329692	FUSE Mini - Gray - 2 Ampere	18	48
834985	GROMMET	16	15
85045	O-RING (.551 x .070)	68	4
855228	CLAMP	56	6
856954	BUSHING	34	21
856982	WASHER (.500 x .810 x .090) Stainless Steel	98	6
858771	SCREW (M10 x 30)	64	3

PARTS INDEX

Part No.	Description	Pg.	Ref.no	Part No.	Description	Pg.	Ref.no
858771	SCREW (M10 x 30)	64	26	858771	SCREW (M10 x 30)	66	20
858954	CLIP (.625)	16	36	859448T	FITTING	16	29
85944975	TUBING (72.00 Inches Bulk)	16	24	85944975	TUBING (72.00 Inches Bulk)	16	24
859732	PLUG	16	5	859732	PLUG	16	27
859747	COUPLER	16	6	859747	COUPLER	16	26
85978571	TUBING (52.00 Inches Bulk)	16	7	863006	O-RING (10.82 x 1.78)	60	34
863006	O-RING (10.82 x 1.78)	68	5	86614	O-RING (1.049 x .103)	42	20
86614	O-RING (1.049 x .103)	60	4	875207	TEE Fitting	16	25
875207	TEE Fitting	100	-	878264A1	RESERVOIR KIT	66	14
878267	PIN	66	8	878408A1	REPAIR KIT Power Trim	66	19
878609	SCREW (#10-16 x .600)	18	52	878609	SCREW (#10-16 x .600)	64	16
879962	CLIP	16	37	880699	THRUST RING	74	23
880699	THRUST RING	94	23	880717A01	SCREW/SEAL KIT Gearcase	100	-
880719	RING Retaining	70	16	880719	RING Retaining	74	4
880719	RING Retaining	78	16	880719	RING Retaining	82	4
880719	RING Retaining	86	4	880719	RING Retaining	90	15
880719	RING Retaining	94	4	881150K1	SEAL KIT Flush - Dual Water Pickup	100	-
881150Q1	FLUSH KIT Dual Water Pick Up	100	-	881879T11	SENSOR Pressure (0 - 100 PSI)	16	22
883705T01	STRAP TOOL Engine Lifting	104	NS	88439A26	CABLE ASSEMBLY Battery - Negative	22	20
88439A46	CABLE ASSEMBLY Battery - Positive	22	16	88439A50	CABLE SET Battery	100	-
884546	GROMMET	32	6	884546	GROMMET	42	31
885361A01	FITTING ASSEMBLY Flush	10	16	88552514	SCREW (M6 x 14 MM) Stainless Steel	4	12
88552645	SCREW (M8X45)	22	9	88552645	SCREW (M8X45)	60	30
88750	WASHER	62	5	88750	WASHER	64	30
888483	SEAL Oil	74	22	888483	SEAL Oil	84	25
888483	SEAL Oil	86	24	888483	SEAL Oil	94	25
888523001	CLIP	42	37	888958001	PLUG Flush Port	10	13
888988008	CLAMP (34.6 MM)	42	9	888988008	CLAMP (34.6 MM)	106	-
888988011	CLAMP (38.1 MM)	42	21	888988011	CLAMP (38.1 MM)	60	5
889244T01	HARNESS ASSEMBLY DTS Clean Power (25 Feet)	100	-	889823001	TETHER Flush Plug	10	15
891663001	SENSOR ASSEMBLY Temperature	16	19	891663001	SENSOR ASSEMBLY Temperature	38	25
891663001	SENSOR ASSEMBLY Temperature	40	23	892073002	SHOULDER SCREW (M6)	10	26
892403	FITTING	16	23	892446	O-RING (14 X 1.78 MM)	60	32
892454030	SCREW (M6 x 30)	52	18	892454035	BOLT (M6 x 36)	52	6
892486K08	CONVERSION KIT Analog	100	-	89302	WASHER (.203 x .406 x .040)	62	12
893395A01	PLATE Flush Mount	100	-	893540	PIN Dowel, 8x12 long	48	7
893709	PIN	62	6	893754035	SCREW (M6 X 35)	54	25
895054	SCREW (M4 x 16 MM)	16	21	895054	SCREW (M4 x 16 MM)	28	27
895054	SCREW (M4 x 16 MM)	38	27	895054	SCREW (M4 x 16 MM)	40	25
895062	WASHER	102	-	895319	GROMMET	34	20
896094A01	FITTING ASSEMBLY	16	8	896305001	BRACKET	100	-
896333T25	HARNESS ASSEMBLY (25 Feet)	100	-	896392	WASHER	100	-
896602	NUT (M14)	62	28	896699	O-RING (1.78 mm x .08 mm)	16	12
896699	O-RING (1.78 mm x .08 mm)	16	33	896699	O-RING (1.78 mm x .08 mm)	18	54
896895	NUT (M12)	68	18	896895	NUT (M12)	98	7
896895	NUT (M12)	98	14	897445501	SCREW (M6 x 20 MM)	20	3
898836	O-RING Brown	48	26	899044	LATCH	26	3
899145	CLIP Tie Strap	16	31	899145	CLIP Tie Strap	32	21
899145	CLIP Tie Strap	42	36	899712A01	CABLE KIT Continuity	100	-
899785K04	HARNESS ASSEMBLY Accessory Power (30 Feet)	100	-	8M0000190	O-RING (4.475 x .210)	84	26
8M0000190	O-RING (4.475 x .210)	86	23	8M0005773	SCREW (M6)	32	8
8M0008031	STUD (M12 x 1.75 x 52)	68	16	8M0011987	SENSOR	18	43
8M0022324	SCREW (M6 x 25 MM)	10	21	8M0022324	SCREW (M6 x 25 MM)	56	4
8M0028753	CLAMP Oetiker (31.6 Diameter)	42	4	8M0028753	CLAMP Oetiker (31.6 Diameter)	60	7
8M0032833	KEY	70	24	8M0032833	KEY	78	24
8M0032833	KEY	90	22	8M0032848	RETAINER Switch	10	19
8M0034870	SEAL Swivel Tube	62	4	8M0034912	O-RING 3.78 X 21.32	58	6
8M0036228	O-RING (8.1 X 1.6)	68	6	8M0037209	GROMMET FSM Retainer	32	25
8M0037225	TRIM SWITCH Round Bezel	10	20	8M0038205	FITTING Straight	46	10
8M0042271	GUIDE Water Tube	98	2	8M0042271	GUIDE Water Tube	98	9
8M0042697	HARNESS Fuel Filter Sensor Extension (144 in)	36	4	8M0043699	DECAL M-Icon, 66mm Red	6	13

Part No.	Description	Pg.	Ref.no	Part No.	Description	Pg.	Ref.no
8M0043699	DECAL M-Icon, 66mm Red	8	3	8M0043700	M-ICON Red, 39mm	38	15
8M0043700	M-ICON Red, 39mm	40	15	8M0044601	O-RING	28	13
8M0044991	IGNITION COIL Ignition Dual Output	20	5	8M0045383	STRIKER PLATE	62	13
8M0045493	PIN	74	13	8M0045493	PIN	82	13
8M0045493	PIN	86	13	8M0045493	PIN	94	13
8M0045676	BEARING Roller	78	8	8M0046215	CRANK, Shifter 1/4 Pivot Pin	74	11
8M0046215	CRANK, Shifter 1/4 Pivot Pin	82	11	8M0046215	CRANK, Shifter 1/4 Pivot Pin	86	11
8M0046215	CRANK, Shifter 1/4 Pivot Pin	94	11	8M0046297	OIL SEAL CARRIER ASSEMBLY	70	17
8M0046297	OIL SEAL CARRIER ASSEMBLY	78	17	8M0046297	OIL SEAL CARRIER ASSEMBLY	90	16
8M0046563	RETAINING RING	70	35	8M0046563	RETAINING RING	78	35
8M0046563	RETAINING RING	90	30	8M0046566	CAP	32	12
8M0046569	RING Thrust	82	23	8M0046569	RING Thrust	86	22
8M0046636	NUT	78	6	8M0047301	SEAL Flush Plug Pocket	10	14
8M0047718	SCREW (M5 X 8MM)	10	12	8M0050058	SCREW 5/16-24 X .5	64	23
8M0050423	WASHER .020	74	18	8M0050423	WASHER .020	82	18
8M0050423	WASHER .020	86	18	8M0050423	WASHER .020	94	18
8M0050424	WASHER .022	74	18	8M0050424	WASHER .022	82	18
8M0050424	WASHER .022	86	18	8M0050424	WASHER .022	94	18
8M0050425	WASHER .024	74	18	8M0050425	WASHER .024	82	18
8M0050425	WASHER .024	86	18	8M0050425	WASHER .024	94	18
8M0050427	WASHER .026	74	18	8M0050427	WASHER .026	82	18
8M0050427	WASHER .026	86	18	8M0050427	WASHER .026	94	18
8M0050428	WASHER .028	74	18	8M0050428	WASHER .028	82	18
8M0050428	WASHER .028	86	18	8M0050428	WASHER .028	94	18
8M0050429	WASHER .030	74	18	8M0050429	WASHER .030	82	18
8M0050429	WASHER .030	86	18	8M0050429	WASHER .030	94	18
8M0050430	WASHER .032	74	18	8M0050430	WASHER .032	82	18
8M0050430	WASHER .032	86	18	8M0050430	WASHER .032	94	18
8M0050431	WASHER .034	74	18	8M0050431	WASHER .034	82	18
8M0050431	WASHER .034	86	18	8M0050431	WASHER .034	94	18
8M0050432	WASHER .036	74	18	8M0050432	WASHER .036	82	18
8M0050432	WASHER .036	86	18	8M0050432	WASHER .036	94	18
8M0050433	WASHER .038	74	18	8M0050433	WASHER .038	82	18
8M0050433	WASHER .038	86	18	8M0050433	WASHER .038	94	18
8M0050434	WASHER .040	74	18	8M0050434	WASHER .040	82	18
8M0050434	WASHER .040	86	18	8M0050434	WASHER .040	94	18
8M0050435	WASHER .042	74	18	8M0050435	WASHER .042	82	18
8M0050435	WASHER .042	86	18	8M0050435	WASHER .042	94	18
8M0050436	WASHER .044	74	18	8M0050436	WASHER .044	82	18
8M0050436	WASHER .044	86	18	8M0050436	WASHER .044	94	18
8M0050437	WASHER .046	74	18	8M0050437	WASHER .046	82	18
8M0050437	WASHER .046	86	18	8M0050437	WASHER .046	94	18
8M0050438	WASHER .048	74	18	8M0050438	WASHER .048	82	18
8M0050438	WASHER .048	86	18	8M0050438	WASHER .048	94	18
8M0050439	WASHER .050	74	18	8M0050439	WASHER .050	82	18
8M0050439	WASHER .050	86	18	8M0050439	WASHER .050	94	18
8M0050575	SPRING	74	15	8M0050575	SPRING	82	15
8M0050575	SPRING	86	15	8M0050575	SPRING	94	15
8M0050821	COVER KIT Flush, Standard	84	33	8M0050821	COVER KIT Flush, Standard	88	33
8M0051043	RETAINING RING	74	8	8M0051043	RETAINING RING	82	8
8M0051043	RETAINING RING	86	7	8M0051043	RETAINING RING	94	8
8M0053726	FSM TOP HOUSING	34	1	8M0053749	REGULATOR ASSEMBLY	34	5
8M0053755	TUBE Suction	34	10	8M0053756	SCREW Plastite W/ HX WSR HD	34	2
8M0053823	THRUST WASHER	74	7	8M0053823	THRUST WASHER	82	7
8M0053823	THRUST WASHER	86	8	8M0053823	THRUST WASHER	94	7
8M0056666	GROUND STRAP Starter	22	5	8M0057697	CUBE RELAY	16	18
8M0058341	CLAMP (80-100MM)	38	12	8M0058341	CLAMP (80-100MM)	40	12
8M0060141	MANUAL RELEASE KIT	66	6	8M0062703	WASHER	78	7
8M0063267	SHIM SET	70	12	8M0063267	SHIM SET	78	12
8M0063267	SHIM SET	90	11	8M0063268	SHIM SET	70	10
8M0063268	SHIM SET	78	10	8M0063268	SHIM SET	90	9

PARTS INDEX

Part No.	Description	Pg.	Ref.no	Part No.	Description	Pg.	Ref.no
8M0063270	SHIM SET	74	5	8M0063270	SHIM SET	74	26
8M0063270	SHIM SET	82	5	8M0063270	SHIM SET	86	5
8M0063270	SHIM SET	94	5	8M0064178	LOCK NUT	88	26
8M0064306	SPACER	74	17	8M0064306	SPACER	82	17
8M0064306	SPACER	86	17	8M0064306	SPACER	94	17
8M0064752	END CAP Cam Tensioner	48	25	8M0066130	SCREW- HALF DOG POINT SET	88	25
8M0069690	SCREW (M10 X 1.5 X 60)	46	5	8M0070367	MOUNT - TUBULAR 8MM	22	2
8M0070368	SPACER (8.3 I.D. X 11.8 O.D.)	22	4	8M0070369	SPACER (8.3 I.D. X 11.8 O.D.)	22	3
8M0071078	SCREW (M6 X 85) Hex Flg	10	36	8M0071653	SCREW Special	76	29
8M0071653	SCREW Special	84	30	8M0071653	SCREW Special	88	30
8M0071653	SCREW Special	96	29	8M0071654	NUT (.625-18 HX)	70	6
8M0071654	NUT (.625-18 HX)	90	5	8M0072341	BEZEL MP Alert - Oval (Chrome)	100	-
8M0073002	SCREW (M6 X 20), Hex Flg	10	22	8M0073002	SCREW (M6 X 20), Hex Flg	38	23
8M0074363	CAP	38	13	8M0074363	CAP	40	13
8M0075735	SCREW (M6 X 30) Hex Flg	10	28	8M0076745	SHIM SET	74	18
8M0076745	SHIM SET	82	18	8M0076745	SHIM SET	86	18
8M0076745	SHIM SET	94	18	8M0080651	SCREW (M6 x 20)	22	11
8M0080651	SCREW (M6 x 20)	28	29	8M0080651	SCREW (M6 x 20)	48	4
8M0082988	SENSOR Crankshaft Position	16	3	8M0084244	PIN Dowel	70	38
8M0084244	PIN Dowel	78	38	8M0084244	PIN Dowel	90	35
8M0084244	PIN Dowel	98	4	8M0084244	PIN Dowel	98	12
8M0084613	C-WASHER	64	17	8M0085373	DECAL M-Icon, 60mm Red	6	12
8M0086569	SCREW Shoulder (M8 x 1.25)	48	32	8M0086888	GROMMET FSM Harness Spacer	34	22
8M0087447	PLUG (10MM)	48	8	8M0087447	PLUG (10MM)	52	8
8M0087451	PLUG (18MM)	16	30	8M0087451	PLUG (18MM)	52	9
8M0087451	PLUG (18MM)	60	27	8M0087453	PLUG (24 MM)	52	10
8M0087453	PLUG (24 MM)	60	28	8M0087454	PLUG (30 MM)	48	13
8M0087454	PLUG (30 MM)	52	11	8M0090403	COUPLING Drive	66	4
8M0090809	FILTER	32	14	8M0093068	HOSE	32	7
8M0094889	PIN	64	22	8M0094889	PIN	66	22
8M0096302	GROMMET	16	35	8M0096302	GROMMET	28	2
8M0097226	TACHOMETER KIT Helm Mount	102	-	8M0103288	PUMP ASSEMBLY High Pressure	34	12
8M0103289	PUMP ASSEMBLY Low Pressure	34	13	8M0103804	SCREW (M6 x 12 MM) Stainless Steel	28	28
8M0103805	SCREW (M6 x 16MM) Stainless Steel	18	49	8M0103805	SCREW (M6 x 16MM) Stainless Steel	28	4
8M0103805	SCREW (M6 x 16MM) Stainless Steel	32	28	8M0103805	SCREW (M6 x 16MM) Stainless Steel	38	5
8M0103805	SCREW (M6 x 16MM) Stainless Steel	40	5	8M0103805	SCREW (M6 x 16MM) Stainless Steel	42	12
8M0103805	SCREW (M6 x 16MM) Stainless Steel	46	18	8M0103805	SCREW (M6 x 16MM) Stainless Steel	60	11
8M0103806	SCREW (M6 x 20 MM) Stainless Steel	4	8	8M0103806	SCREW (M6 x 20 MM) Stainless Steel	18	42
8M0103806	SCREW (M6 x 20 MM) Stainless Steel	28	11	8M0103806	SCREW (M6 x 20 MM) Stainless Steel	32	10
8M0103806	SCREW (M6 x 20 MM) Stainless Steel	42	3	8M0103806	SCREW (M6 x 20 MM) Stainless Steel	60	2
8M0103807	SCREW (M6 x 25 MM) Stainless Steel	16	13	8M0103807	SCREW (M6 x 25 MM) Stainless Steel	32	3
8M0103807	SCREW (M6 x 25 MM) Stainless Steel	48	24	8M0103808	SCREW (M6 x 30 MM) Stainless Steel	20	4
8M0103809	SCREW (M6 x 40 MM) Stainless Steel	48	10	8M0103821	SCREW	48	35
8M0103823	SCREW	46	15	8M0106635	FUEL FILTER	32	23
8M0106635	FUEL FILTER	106	-	8M0106635	FUEL FILTER	106	-
8M0108527	WASHER Tab	84	31	8M0108527	WASHER Tab	88	31
8M0109164	PIN	74	27	8M0109164	PIN	84	28
8M0109164	PIN	88	28	8M0109164	PIN	94	27
8M0109442	GASKET	38	6	8M0109442	GASKET	40	6
8M0109756	DOUBLE NUT KIT Transom Bolt	102	-	8M0111653	NUT Retainer	84	32
8M0111653	NUT Retainer	88	32	8M0112869	OIL PLUG ASSEMBLY	68	3
8M0112903	GASKET Rubber Molded Steel	70	21	8M0112903	GASKET Rubber Molded Steel	78	21
8M0113732	HARNESS ASSEMBLY DTS, Clean Power, 14 Feet	100	-	8M0114805	THROTTLE BODY ASSEMBLY 80 MM	38	7
8M0114805	THROTTLE BODY ASSEMBLY 80 MM	40	7	8M0115104	LEVER ASSEMBLY Tilt Lock	64	14
8M0120073	TUBE Water	34	16	8M0123025	OIL FILTER	28	33
8M0123025	OIL FILTER	106	-	8M0123025	OIL FILTER	106	-
8M0126144	FUEL FILTER	36	1	8M0126144	FUEL FILTER	100	-
8M0127681	POWER HARNESS ASSEMBLY Helm (10 feet)	100	-	8M0127682	POWER HARNESS ASSEMBLY Helm (15 feet)	100	-
8M0129230	HOSE Oil Drain	104	16	8M0130705	GEARCASE HEIGHT TOOL KIT	104	21
8M0130873	TUBE Fuel	34	17	8M0130877	FSM CAP	34	8
8M0130878	FSM BOTTOM HOUSING	34	19	8M0131810	MP ALERT COWL KIT (Chrome Bezel)	100	-

Part No.	Description	Pg.	Ref.no	Part No.	Description	Pg.	Ref.no
8M0132732	FUEL SUPPLY MODULE	32	1	8M0132732	FUEL SUPPLY MODULE	34	-
8M0133370	FSM SEAL KIT	34	-	8M0133491	TILLER HANDLE ASSEMBLY Big Tiller Mechanical/Power Steer	100	-
8M0133492	TILLER HANDLE ASSEMBLY Big Tiller - DTS with Power Steer	100	-	8M0133542	CABLE KIT (12 ft) Battery	100	-
8M0135348	SPARK PLUGS	20	6	8M0135348	SPARK PLUGS	106	-
8M0135386	FUEL FILTER KIT Boat Mounted	36	-	8M0135386	FUEL FILTER KIT Boat Mounted	100	-
8M0137814	ANODE ANTIVENT PLATE	70	2	8M0137814	ANODE ANTIVENT PLATE	78	2
8M0137814	ANODE ANTIVENT PLATE	106	-	8M0137816	THERMOSTAT	42	8
8M0138392	DIAGNOSTIC TOOL KIT CDS -G3	104	22	8M0138978	BEZEL MP Alert (Warm Fusion White)	100	-
8M0141339	BUSHING Swivel Tube Pivot	62	17	8M0141907	CABLE KIT - THROTTLE AND SHIFT GEN II	100	-
8M0142173	TOP COWL ASSEMBLY Decaled without Horsepower	4	1	8M0142186	DECAL SET	6	1
8M0142187	DECAL SET Pro XS	6	3	8M0142187	DECAL SET Pro XS	12	-
8M0142199	DECAL SET 200 HP	6	4	8M0142200	DECAL SET 225 HP	6	6
8M0142201	DECAL SET 250 HP	6	8	8M0142202	DECAL SET 300 HP	6	10
8M0142209	ACCENT COWL ASSEMBLY Pro Black	8	1	8M0142219	LOWER COWL ASSEMBLY Port and Starboard	10	1
8M0142224	LOWER REAR COWL ASSEMBLY Black	10	39	8M0142229	LOWER FRONT COWL ASSEMBLY Black	10	23
8M0142238	DOOR ASSEMBLY Black	4	13	8M0142242	COWL LATCH ASSEMBLY	4	7
8M0142245	FLYWHEEL	14	1	8M0142246	AIR INLET ASSEMBLY	38	11
8M0142246	AIR INLET ASSEMBLY	40	11	8M0142247	AIR INLET ASSEMBLY	38	11
8M0142247	AIR INLET ASSEMBLY	40	11	8M0142248	ALTERNATOR 85 AMP	24	1
8M0142251	BELT	24	6	8M0142251	BELT	106	-
8M0142252	TAPPET (3.375)	54	23	8M0142253	SHIFT ACTUATOR	68	8
8M0142255	TAPPET (3.390)	54	23	8M0142256	TAPPET (3.405)	54	23
8M0142257	TAPPET (3.420)	54	23	8M0142258	TAPPET (3.435)	54	23
8M0142259	ENGINE HARNESS Mechanical	16	1	8M0142260	ENGINE HARNESS DTS	16	1
8M0142261	TAPPET (3.450)	54	23	8M0142263	TAPPET (3.465)	54	23
8M0142264	FUEL INJECTOR	32	13	8M0142265	SENSOR Oil Level	100	-
8M0142272	GASKET Cylinder Head	54	26	8M0142273	GASKET Cylinder Head	54	26
8M0142274	GASKET	46	16	8M0142275	GASKET	46	7
8M0142276	THROTTLE BODY ASSEMBLY 64 MM	38	7	8M0142276	THROTTLE BODY ASSEMBLY 64 MM	40	7
8M0142277	TAPPET (3.480)	54	23	8M0142279	LONG BLOCK	48	-
8M0142279	LONG BLOCK	54	-	8M0142279	LONG BLOCK	58	-
8M0142280	LONG BLOCK	48	-	8M0142280	LONG BLOCK	54	-
8M0142280	LONG BLOCK	58	-	8M0142281	CAMSHAFT COVER ASSEMBLY Port	56	1
8M0142282	CAMSHAFT COVER ASSEMBLY Starboard	56	1	8M0142283	SEAL Camshaft Cover, Port	56	2
8M0142284	SEAL Camshaft Cover, Starboard	56	2	8M0142285	SEAL Spark Plug	56	3
8M0142290	CAP Oil	28	7	8M0142291	TAPPET (3.495)	54	23
8M0142292	TAPPET (3.510)	54	23	8M0142294	GEAR HOUSING ASSEMBLY Silver (Standard Long) (1.85)	70	-
8M0142294	GEAR HOUSING ASSEMBLY Silver (Standard Long) (1.85)	74	-	8M0142309	GEAR HOUSING ASSEMBLY Silver (Standard X-Long) HD 1.75	78	-
8M0142309	GEAR HOUSING ASSEMBLY Silver (Standard X-Long) HD 1.75	82	-	8M0142309	GEAR HOUSING ASSEMBLY Silver (Standard X-Long) HD 1.75	86	-
8M0142311	GEAR HOUSING ASSEMBLY Silver (Counter Rotation X-Long) HD 1.75	78	-	8M0142311	GEAR HOUSING ASSEMBLY Silver (Counter Rotation X-Long) HD 1.75	82	-
8M0142311	GEAR HOUSING ASSEMBLY Silver (Counter Rotation X-Long) HD 1.75	86	-	8M0142316	GEAR HOUSING ASSEMBLY Silver (Standard Long) (1.75) (Torque Master)	90	-
8M0142316	GEAR HOUSING ASSEMBLY Silver (Standard Long) (1.75) (Torque Master)	94	-	8M0142341	POWER TRIM ASSEMBLY	64	21
8M0142341	POWER TRIM ASSEMBLY	66	-	8M0142344	CYLINDER BLOCK	48	1
8M0142346	SCREW (M11 x 107 MM) 12 POINT HEX HEAD	48	12	8M0142347	SCREW (M10 x 96 MM) HEX FLG HD	48	11
8M0142348	GASKET Cover Plate	48	9	8M0142349	COVER	48	3
8M0142352	PLUG 18 MM	48	5	8M0142353	O-RING (0.614 x 0.070)	48	6
8M0142354	VALVE Seat, Intake	52	2	8M0142355	VALVE Seat, Exhaust	52	3
8M0142357	PLUG 21 MM Special	52	7	8M0142358	VALVE Guide	52	4
8M0142359	SEAL Valve	52	15	8M0142360	SPRING	52	14
8M0142361	VALVE Intake	52	16	8M0142362	VALVE Exhaust	52	17
8M0142363	RETAINER	52	13	8M0142364	VALVE Key	52	12
8M0142365	TAPPET (3.000)	52	23	8M0142366	CHAIN Cam to Cam	52	20
8M0142367	TENSIONER	52	19	8M0142368	O-RING (230 2.484 x .139)	54	27
8M0142369	SCREW (M10 x 107) TORX FLG HD	54	24	8M0142371	DECAL Read Manual, Black	12	41
8M0142379	SEAL Main Bearing	58	4	8M0142381	PISTON RING ASSEMBLY	58	10

PARTS INDEX

Part No.	Description	Pg.	Ref.no	Part No.	Description	Pg.	Ref.no
8M0142383	CIRCLIP	58	11	8M0142384	SCREW (M8 x 42) HX FLG HEAD	14	2
8M0142385	SPACER	58	5	8M0142386	RING RETAINING	58	3
8M0142389	PLUG Flywheel	14	3	8M0142390	SPROCKET Camshaft	48	30
8M0142392	GUIDE Moveable	48	34	8M0142393	GUIDE Cam Drive	48	33
8M0142394	TENSIONER ASSEMBLY Timing Chain	48	27	8M0142395	CAM BOLT M12 Special Left Hand	48	29
8M0142399	CHAIN CAM DRIVE	48	28	8M0142400	GUIDE SHORT SPAN	48	31
8M0142401	SCREW (M6) HX FL REDUCED HEAD	28	38	8M0142402	OIL PICK UP ASSEMBLY	28	41
8M0142403	OIL PUMP ASSEMBLY	28	35	8M0142407	SCREW (M6) HEX SOCKET FLAT X 16 LG	28	37
8M0142408	DOWEL Pin	28	36	8M0142409	PLUG Balancer	48	14
8M0142410	COVER Balancer, Stamped	48	22	8M0142411	CAMSHAFT Exhaust, Starboard	52	21
8M0142412	CAMSHAFT Intake, Starboard	52	22	8M0142413	MANDREL Rear Gear Bearing Cone	104	11
8M0142414	TOOL Gear Assembly Driver	104	12	8M0142415	CAMSHAFT Intake, Port	52	22
8M0142416	CAMSHAFT Exhaust, Port	52	21	8M0142417	CRANKSHAFT	58	1
8M0142418	CONNECTING ROD	58	12	8M0142421	BALANCE SHAFT	48	15
8M0142422	SPROCKET	48	21	8M0142423	SCREW (M8 x 1.25) HEX FL SEMS	48	20
8M0142424	WASHER THRUST	58	7	8M0142426	PIN Dowel	48	19
8M0142427	PLATE Retainer	48	17	8M0142428	SCREW (M5 x 12) HEX FLG	48	18
8M0142429	BEARING Ball	48	16	8M0142430	HOSE Fuel Filter to FSM	32	24
8M0142431	TAPPET (3.015)	52	23	8M0142432	HOSE Intake to FSM	32	4
8M0142433	FUEL RAIL Starboard	32	11	8M0142434	FUEL RAIL Port	32	11
8M0142435	COUPLING Water Pump	70	27	8M0142435	COUPLING Water Pump	78	27
8M0142435	COUPLING Water Pump	90	27	8M0142436	HOSE ASSEMBLY Manifold Ref Upper	32	5
8M0142437	HOSE ASSEMBLY FSM To Fuel Rail	32	17	8M0142438	TAPPET (3.075)	52	23
8M0142439	TAPPET (3.030)	52	23	8M0142440	TAPPET (3.045)	52	23
8M0142441	TAPPET (3.060)	52	23	8M0142442	HOSE ASSEMBLY FSM To Port Rail	32	16
8M0142443	TAPPET (3.120)	52	23	8M0142444	HOSE ASSEMBLY FSM To Starboard Rail	32	18
8M0142445	CLIP	32	20	8M0142446	HOSE ASSEMBLY Cowl to FSM	32	22
8M0142447	TAPPET (3.135)	52	23	8M0142448	LIFTING EYE Starboard	48	37
8M0142449	TUBE Oil Pump to Filter	28	18	8M0142450	O-RING (70 Durometer)	28	20
8M0142452	O-RING (70 Durometer)	28	19	8M0142453	FITTING	28	32
8M0142454	OIL DRIP TRAY	28	23	8M0142455	BRACKET Fuse Box	18	50
8M0142456	FITTING	28	25	8M0142457	HOSE Drip tray	28	24
8M0142459	LIFTING EYE Port	48	36	8M0142460	SCREW (M8 x 45) HEX FLG	24	7
8M0142460	SCREW (M8 x 45) HEX FLG	28	3	8M0142463	TUBE Dipstick	28	16
8M0142464	TAPPET (3.150)	52	23	8M0142465	TAPPET (3.165)	52	23
8M0142466	TAPPET (3.180)	52	23	8M0142467	BRACKET Oil Fill	28	1
8M0142468	TUBE Oil Fill	28	12	8M0142469	HOSE Oil Fill	28	10
8M0142470	GROMMET	28	6	8M0142471	GROMMET (0.375 IN)	28	17
8M0142472	HOSE Port to Starboard Breather	56	5	8M0142473	HOSE Starboard Breather to Intake	56	7
8M0142475	COVER Fuel Rail, Port	32	9	8M0142476	COVER Fuel Rail, Starboard	32	19
8M0142477	COVER Intake Manifold	38	24	8M0142478	NECK Oil Fill	28	5
8M0142479	COVER Electrical Plate	16	39	8M0142480	TUBE Dipstick- Upper	28	14
8M0142481	O-RING (0.362 x 0.103)	28	15	8M0142482	GASKET Adapter	28	30
8M0142483	ADAPTER Oil Filter	28	31	8M0142484	BRACKET Oil FIlter	28	21
8M0142485	SCREW (M6) HX FLG	28	22	8M0142486	HOSE ASSEMBLY	42	35
8M0142487	TAPPET (3.195)	52	23	8M0142488	TAPPET (3.210)	52	23
8M0142489	TAPPET (3.225)	52	23	8M0142490	TAPPET (3.240)	52	23
8M0142491	TAPPET (3.255)	52	23	8M0142492	TAPPET (3.105)	52	23
8M0142494	FITTING	42	1	8M0142495	TAPPET (3.090)	52	23
8M0142496	HOSE ASSEMBLY Water Outlet, Port	42	40	8M0142497	FITTING Flush Drain	42	41
8M0142498	HOSE ASSEMBLY Water Outlet, Starboard	42	34	8M0142500	HOSE Thermostat Outlet	42	16
8M0142501	GROMMET	42	17	8M0142503	HOSE Cooling	42	5
8M0142504	HOSE	42	24	8M0142505	HOSE	42	27
8M0142506	FITTING Connector	42	23	8M0142507	YFITTING	42	25
8M0142509	FITTING Connector	44	47	8M0142510	FITTING	42	28
8M0142511	HOSE	42	15	8M0142512	FITTING Strainer	42	10
8M0142513	HOSE	42	14	8M0142514	FITTING Inlet	42	19
8M0142515	STRAINER Water	42	18	8M0142516	FITTING Barbed	42	6
8M0142517	O-RING (23.6 MM ID X 2.9 MM)	42	7	8M0142518	HOSE ASSEMBLY	42	30
8M0142519	TAPPET (3.270)	52	23	8M0142520	TAPPET (3.285)	52	23
8M0142521	TAPPET (3.300)	54	23	8M0142522	FITTING Barbed	42	32

Part No.	Description	Pg.	Ref.no	Part No.	Description	Pg.	Ref.no
8M0142523	O-RING (8.1 MM ID X 1.6MM)	42	33	8M0142524	HOSE	42	38
8M0142525	TAPPET (3.315)	54	23	8M0142527	TAPPET (3.330)	54	23
8M0142528	HOSE ASSEMBLY	44	42	8M0142529	HOSE	44	43
8M0142530	HOSE ASSEMBLY	44	44	8M0142531	CLIP	44	46
8M0142532	TAPPET (3.345)	54	23	8M0142533	SCREW (M8 x 85)	60	29
8M0142534	FITTING Sprayer	60	31	8M0142535	MANIFOLD Exhaust	60	26
8M0142536	FITTING Sprayer	60	33	8M0142537	GASKET Exhaust Manifold	54	28
8M0142538	COUPLING	60	25	8M0142541	CLAMP (93.7 MM DIA)	60	24
8M0142542	SENSOR Temperature	16	11	8M0142543	MANIFOLD Intake	38	1
8M0142544	GASKET Crankcase Cover	38	3	8M0142544	GASKET Crankcase Cover	40	3
8M0142545	GASKET Throttle Body	38	2	8M0142545	GASKET Throttle Body	40	2
8M0142546	RUNNERS INTAKE Starboard	38	17	8M0142546	RUNNERS INTAKE Starboard	40	17
8M0142547	GASKET Runner Plenum	38	19	8M0142547	GASKET Runner Plenum	40	19
8M0142548	GASKET Intake Manifold	38	18	8M0142548	GASKET Intake Manifold	40	18
8M0142549	RUNNERS INTAKE Port	38	17	8M0142549	RUNNERS INTAKE Port	40	17
8M0142550	BRACKET MAP Sensor	38	9	8M0142550	BRACKET MAP Sensor	40	9
8M0142551	HOSE MAP Sensor	38	28	8M0142551	HOSE MAP Sensor	40	26
8M0142552	ISOLATER	38	4	8M0142552	ISOLATER	40	4
8M0142553	SCREW (M6 x 37)	38	20	8M0142553	SCREW (M6 x 37)	40	20
8M0142554	SCREW (M6 x 30)	38	21	8M0142554	SCREW (M6 x 30)	40	21
8M0142555	SCREW (M6 x 30)	38	22	8M0142555	SCREW (M6 x 30)	40	22
8M0142556	SEAL Inlet	38	14	8M0142556	SEAL Inlet	40	14
8M0142559	HOLDING FIXTURE Gear Assembly	104	8	8M0142568	GASKET Throttle Body	38	6
8M0142568	GASKET Throttle Body	40	6	8M0142569	DECAL Warning	38	29
8M0142569	DECAL Warning	40	27	8M0142570	DECAL Check Engine Oil	28	42
8M0142571	CLAMP (70-90 MM) 9 MM WIDE	38	12	8M0142571	CLAMP (70-90 MM) 9 MM WIDE	40	12
8M0142575	PISTON ASSEMBLY	58	9	8M0142576	DIPSTICK	28	34
8M0142577	DECAL Read Manual, Clear	10	41	8M0142578	GASKET MAT Sensor	16	20
8M0142578	GASKET MAT Sensor	38	26	8M0142578	GASKET MAT Sensor	40	24
8M0142582	RIGGING DOOR Black	10	35	8M0142585	CLAMP	32	15
8M0142587	PLUG Lower Relief Muffler	80	40	8M0142591	MOTOR KIT	66	1
8M0142613	TAPPET (3.360)	54	23	8M0142615	MANDREL Press Spacer	104	9
8M0142616	GASKET Face Plate to Gearcase	90	19	8M0142617	HOSE	42	39
8M0142618	HOSE	46	24	8M0142619	HOSE	46	21
8M0142624	GUIDE PLATE Bearing Carrier	104	10	8M0142636	BEARING MANDREL	104	13
8M0142642	HOSE	42	22	8M0142649	SENSOR WIF	36	2
8M0142652	PCM 200 V8 PROXS DTS	18	45	8M0142653	PCM 200 V8 PROXS MECH	18	45
8M0142655	PCM 225 V8 PROXS DTS	18	45	8M0142656	PCM 225 V8 PROXS MECH	18	45
8M0142659	SEAL	70	20	8M0142659	SEAL	78	20
8M0142659	SEAL	90	37	8M0142666	TAPPET (3.525)	54	23
8M0142667	TAPPET (3.540)	54	23	8M0142668	TAPPET (3.555)	54	23
8M0142669	TAPPET (3.570)	54	23	8M0142670	TAPPET (3.585)	54	23
8M0142671	GUIDE	20	2	8M0142675	CABLE ASSEMBLY Fusable Link	24	4
8M0142677	SCREW (M8 x 85)	24	10	8M0142679	STARTER	22	1
8M0142680	BRACKET HOT STUD	22	10	8M0142681	CABLE ASSEMBLY Starter-Postitive	22	15
8M0142682	WIRE HARNESS Trim	64	31	8M0142684	RELAY HOUSING	16	16
8M0142685	PLATE Electrical	16	38	8M0142686	SCREW (M6 x 25)	16	34
8M0142687	COVER Hot Stud	22	21	8M0142688	SENSOR Pressure	18	53
8M0142689	SENSOR Temperature	16	32	8M0142690	SENSOR MAP	18	55
8M0142690	SENSOR MAP	38	8	8M0142690	SENSOR MAP	40	8
8M0142691	BRACKET Cam Sensor	18	44	8M0142692	BRACKET Alternator	24	8
8M0142693	BRACKET Alternator	24	9	8M0142694	WIRE HARNESS Coil Adapter	20	7
8M0142695	SENSOR Oxygen	18	41	8M0142696	SENSOR Pressure	16	10
8M0142696	SENSOR Pressure	100	-	8M0142697	SPARK PLUG WIRES	20	1
8M0142698	TAPPET (3.600)	54	23	8M0142699	TAPPET (3.615)	54	23
8M0142700	TAPPET (3.630)	54	23	8M0142701	TAPPET (3.645)	54	23
8M0142702	TAPPET (3.660)	54	23	8M0142703	TAPPET (3.675)	54	23
8M0142704	TAPPET (3.690)	54	23	8M0142705	ADAPTER PLATE	46	1
8M0142706	MOUNT UPPER	46	14	8M0142707	PLATE	46	25
8M0142708	SCREW (M6)	46	19	8M0142710	DRAIN Cowl	46	26
8M0142711	WASHER (28.4 MM x 1.6 MM)	46	13	8M0142712	O-RING (0.796 x 0.139)	70	30

PARTS INDEX

Part No.	Description	Pg.	Ref.no	Part No.	Description	Pg.	Ref.no
8M0142712	O-RING (0.796 x 0.139)	78	30	8M0142713	CAP Chap Support	68	2
8M0142714	FITTING	68	11	8M0142715	BRACKET Bib Mount	68	13
8M0142716	INSERT	68	14	8M0142719	STRAINER ASSEMBLY	60	9
8M0142720	SEAL	60	10	8M0142721	GROMMET Exhaust	60	12
8M0142722	BRACKET FSM	32	26	8M0142724	GROMMET	32	27
8M0142725	TUBE Water Inlet	60	8	8M0142726	SCREW (M6)	60	13
8M0142727	TUBE Water Outlet	60	6	8M0142728	PIPE Exhaust	60	1
8M0142729	FITTING	60	16	8M0142730	FITTING	60	21
8M0142731	FITTING ELBOW	60	3	8M0142738	HOSE	60	15
8M0142738	HOSE	60	20	8M0142740	GROMMET	60	18
8M0142742	BRACKET Upper Mount	46	8	8M0142743	NUT (M10 x 1.5)	46	3
8M0142744	STUD (M10 x 185)	46	2	8M0142745	SEAL Upper Mount Bracket	46	11
8M0142746	STUD (M10 x 81.5)	46	4	8M0142748	FITTING	46	20
8M0142756	PCM 250 V8 PROXS DTS	18	45	8M0142763	ISOLATER	38	4
8M0142763	ISOLATER	40	4	8M0142775	HOUSING Driveshaft, Black	68	1
8M0142779	SPACER ASSEMBLY 5 IN Black	98	1	8M0142780	TUBE Water	98	3
8M0142781	STUD (M12 x 179)	68	16	8M0142781	STUD (M12 x 179)	98	5
8M0142783	PCM 250 V8 PROXS MECH	18	45	8M0142787	SPACER ASSEMBLY 10 IN Black	98	8
8M0142788	STUD (M12 x 306)	68	16	8M0142788	STUD (M12 x 306)	98	11
8M0142789	WATER TUBE	98	10	8M0142792	MUFFLER Port	60	17
8M0142793	PLUG Drain	60	23	8M0142794	SWIVEL BRACKET	62	1
8M0142795	WASHER (1.25 x 19)	62	26	8M0142796	MOUNT Snubber	62	21
8M0142797	YOKE	62	19	8M0142798	STUD (M14 x 146)	62	20
8M0142799	CABLE ASSEMBLY	62	29	8M0142800	BRACKET Transom, Port	64	1
8M0142801	BRACKET Transom, Starboard	64	2	8M0142802	COVER Lower Mount	62	24
8M0142803	STEERING ARM Black	62	2	8M0142805	TRIM POSITION SENSOR	62	9
8M0142809	BRACKET Tilt Tube	64	19	8M0142810	O-RING (0.612 x .0103)	64	13
8M0142811	SCREW	64	11	8M0142824	BRACKET Shift Throttle	26	1
8M0142825	RETAINER	26	9	8M0142826	SPRING Throttle	26	7
8M0142827	HARNESS Demand Sensor	26	5	8M0142828	ARM ASSEMBLY	26	8
8M0142829	SCREW (M6 x 20)	68	7	8M0142830	SCREW (M6 x 20)	46	27
8M0142831	LATCH Bottom	46	28	8M0142832	LATCH Top	46	29
8M0142835	BEARING Roller Tapered	74	9	8M0142835	BEARING Roller Tapered	82	9
8M0142835	BEARING Roller Tapered	86	9	8M0142835	BEARING Roller Tapered	94	9
8M0142836	BEARING Roller Tapered	74	10	8M0142836	BEARING Roller Tapered	82	10
8M0142836	BEARING Roller Tapered	86	6	8M0142836	BEARING Roller Tapered	94	10
8M0142838	PROPELLER SHAFT	94	16	8M0142839	BEARING CARRIER	94	19
8M0142840	O-RING (3.85 x 0.210)	74	24	8M0142840	O-RING (3.85 x 0.210)	94	24
8M0142841	GEAR Reverse	94	20	8M0142843	BEARING NEEDLE	94	22
8M0142846	RETAINER GEAR	94	21	8M0142847	PLATE Anodic	90	2
8M0142849	CLUTCH Sliding	74	14	8M0142849	CLUTCH Sliding	94	14
8M0142850	SCREW (M10 X 25)	70	3	8M0142850	SCREW (M10 X 25)	78	3
8M0142850	SCREW (M10 X 25)	90	3	8M0142850	SCREW (M10 X 25)	106	-
8M0142851	VRING Face Seal	70	29	8M0142851	VRING Face Seal	78	29
8M0142851	VRING Face Seal	90	26	8M0142852	GEAR HOUSING ASSEMBLY Basic, Silver (Torque Master)	90	1
8M0142852	GEAR HOUSING ASSEMBLY Basic, Silver (Torque Master)	94	1	8M0142853	PLUG Torpedo	74	2
8M0142853	PLUG Torpedo	82	2	8M0142853	PLUG Torpedo	86	2
8M0142853	PLUG Torpedo	94	2	8M0142854	O RING (2.175 x .103)	70	15
8M0142854	O RING (2.175 x .103)	74	3	8M0142854	O RING (2.175 x .103)	78	15
8M0142854	O RING (2.175 x .103)	82	3	8M0142854	O RING (2.175 x .103)	86	3
8M0142854	O RING (2.175 x .103)	90	14	8M0142854	O RING (2.175 x .103)	94	3
8M0142855	TAB WASHER	76	30	8M0142855	TAB WASHER	96	30
8M0142857	SPOOL	74	12	8M0142857	SPOOL	82	12
8M0142857	SPOOL	86	12	8M0142857	SPOOL	94	12
8M0142858	SHIFT SHAFT Long	70	39	8M0142858	SHIFT SHAFT Long	78	39
8M0142858	SHIFT SHAFT Long	90	36	8M0142859	BUSHING Shift Shaft	70	33
8M0142859	BUSHING Shift Shaft	78	33	8M0142859	BUSHING Shift Shaft	90	32
8M0142860	O-RING	70	34	8M0142860	O-RING	78	34
8M0142860	O-RING	90	31	8M0142865	SHIFT SHAFT X-Long	80	39

Part No.	Description	Pg.	Ref.no	Part No.	Description	Pg.	Ref.no
8M0142866	RING Retaining	70	32	8M0142866	RING Retaining	78	32
8M0142866	RING Retaining	90	29	8M0142869	COVER HOUSING Gearcase	70	19
8M0142869	COVER HOUSING Gearcase	78	19	8M0142869	COVER HOUSING Gearcase	90	18
8M0142871	CLUTCH Sliding 6 Jaw	82	14	8M0142871	CLUTCH Sliding 6 Jaw	86	14
8M0142873	BEARING	74	21	8M0142873	BEARING	82	21
8M0142874	GEAR Reverse	82	20	8M0142875	SPACER	82	22
8M0142877	SHAFT PROPELLER	82	16	8M0142877	SHAFT PROPELLER	86	16
8M0142878	PLUG Screw	70	4	8M0142878	PLUG Screw	78	4
8M0142878	PLUG Screw	106	-	8M0142883	SHAFT Prop	74	16
8M0142888	GEAR HOUSING ASSEMBLY Basic, Silver	78	1	8M0142888	GEAR HOUSING ASSEMBLY Basic, Silver	82	1
8M0142888	GEAR HOUSING ASSEMBLY Basic, Silver	86	1	8M0142890	BEARING CARRIER	74	19
8M0142891	GEAR Reverse, 24T	74	20	8M0142896	SCREW (M8 x 80)	22	8
8M0142897	BEARING CARRIER ASSEMBLY LH	86	19	8M0142903	CLIP	4	9
8M0142904	ALIGNMENT LEG	4	2	8M0142906	SEAL Top Cowl	4	6
8M0142907	LOCK PUSH	4	18	8M0142908	SEAL Door	4	16
8M0142913	KEEPER ASSEMBLY	4	14	8M0142914	SHIM LATCH	4	19
8M0142915	BUMPER Starboard	4	5	8M0142916	BUMPER Port	4	4
8M0142917	SEAL Adapter Plate	46	30	8M0142918	SCREW (M5 x 12)	10	2
8M0142918	SCREW (M5 x 12)	10	18	8M0142919	STRIKER ASSEMBLY Port	10	5
8M0142921	SCREW (M6 X 16)	10	6	8M0142922	RETAINER Front, Port	10	4
8M0142923	RETAINER Rear, Port	10	3	8M0142924	COVER Port	10	25
8M0142925	STRIKER ASSEMBLY Starboard	10	7	8M0142927	BUSHING	10	32
8M0142928	BLOCK	10	9	8M0142929	RETAINER Front, Starboard	10	10
8M0142930	RETAINER Rear, Starboard	10	8	8M0142931	COVER Starboard	10	27
8M0142932	STRIKER ASSEMBLY Front	10	24	8M0142933	SCREW (M6 x 40)	10	37
8M0142942	GUIDE Rear, Starboard	10	38	8M0142943	GUIDE Rear, Port	10	40
8M0142944	GUIDE Front, Starboard	10	34	8M0142945	GUIDE Front, Port	10	17
8M0142946	PLATE	10	11	8M0142947	GROMMET Trim Sensor	10	33
8M0142948	GROMMET Mechanical	10	30	8M0142949	ADAPTER	10	29
8M0142950	GROMMET DTS	10	30	8M0142951	PCM 300 V8 PROXS DTS	18	45
8M0142954	CLIP	4	11	8M0142955	SCREW (M5 x 0.8)	4	10
8M0142963	PCM 300 V8 PROXS MECH	18	45	8M0142969	SHIFT SHAFT TOOL	104	1
8M0142970	ALIGNMENT TOOL Preload Driver	104	2	8M0142971	GASKET SET Powerhead	46	-
8M0142973	SHIFT SHAFT HANDLE TOOL	104	3	8M0142974	RETAINER PRESS FIXTURE	104	4
8M0142976	TOOL Press Fixture Base	104	5	8M0142978	SEAL ACTUATOR	68	10
8M0142979	SEAL KIT	70	-	8M0142979	SEAL KIT	76	-
8M0142979	SEAL KIT	80	-	8M0142979	SEAL KIT	84	-
8M0142979	SEAL KIT	88	-	8M0142979	SEAL KIT	90	-
8M0142979	SEAL KIT	96	-	8M0142980	IMPELLER REPAIR KIT	70	-
8M0142980	IMPELLER REPAIR KIT	80	-	8M0142980	IMPELLER REPAIR KIT	106	-
8M0142981	SCREW (M14x2.00x100) Hex Flg Hd	46	12	8M0142982	SHIELD Oil Deflector	46	17
8M0142983	SHAFT TOOL Bearing Carrier Assembly	104	6	8M0142996	PO CHECK KIT	66	5
8M0142997	TILT SHAFT KIT	66	7	8M0142998	TILT CYLINDER ASSEMBLY	66	9
8M0142999	O RING KIT TILT CYLINDER	66	10	8M0143000	MEMORY PISTON KIT	66	11
8M0143001	PISTON ASSEMBLY	66	12	8M0143003	END CAP ASSEMBLY	66	13
8M0143004	PUMP KIT	66	18	8M0143005	SHOCK ROD KIT	66	23
8M0143229	PLUG Drip Tray	28	26	8M0143359	SOUND CONTROL KIT Advanced	100	-
8M0145100	SCREW M8 Hex Flange	24	5	8M0145165	BLOCK WATER PRESSURE KIT Analog	16	4
8M0145165	BLOCK WATER PRESSURE KIT Analog	100	-	8M0145393	TOOL Threaded Clutch Assembly	104	7
8M0145541	OPERATION MANUAL V6/V8 CMS Mechanical	2	-	8M0145542	OPERATION MANUAL V6/V8 CMS DTS	2	-
8M0145604	PARTS MANUAL 200/225/250/300 4.6L V8 4 Stroke Pro XS	2	-	8M0145607	TOOL Bar Puller	104	NS
8M0145768	GEAR HOUSING ASSEMBLY Basic, Silver (4.8)	70	1	8M0145768	GEAR HOUSING ASSEMBLY Basic, Silver (4.8)	74	1
8M0145934	INSTALLATION MANUAL V6/V8 CMS	2	-	8M0145987	HARNESS KIT Re-power Plan	100	-
8M0145996	DECAL 200 HP	6	5	8M0145996	DECAL 200 HP	8	4
8M0145997	DECAL 225 HP	6	7	8M0145997	DECAL 225 HP	8	5
8M0145998	DECAL 250 HP	6	9	8M0145998	DECAL 250 HP	8	6
8M0145999	DECAL 300 HP	6	11	8M0145999	DECAL 300 HP	8	7
8M0146003	NUT M8 x 1.25 Hex	22	13	8M0146058	BEARING CARRIER ASSEMBLY RH	82	19
8M0146062	DRIVESHAFT KIT Long	70	9	8M0146062	DRIVESHAFT KIT Long	98	15
8M0146065	DRIVESHAFT KIT Long	78	9	8M0146065	DRIVESHAFT KIT Long	98	15

PARTS INDEX

Part No.	Description	Pg.	Ref.no	Part No.	Description	Pg.	Ref.no
8M0146066	DRIVESHAFT KIT X-Long	78	9	8M0146066	DRIVESHAFT KIT X-Long	98	15
8M0146102	SEAL Throttle Body	38	14	8M0146102	SEAL Throttle Body	40	14
8M0146147	CONNECTOR CAP 3 Pin	16	9	8M0146171	HOSE ASSEMBLY Sprayer	46	22
8M0146189	NUT TILT TUBE LOCK Black	64	10	8M0146386	SHIM SET	84	27
8M0146386	SHIM SET	88	27	8M0146553	BEARING ASSEMBLY Cup/Cone	70	11
8M0146553	BEARING ASSEMBLY Cup/Cone	78	11	8M0146553	BEARING ASSEMBLY Cup/Cone	90	10
8M0146566	BEARING ASSEMBLY Cup/Cone	70	13	8M0146566	BEARING ASSEMBLY Cup/Cone	78	13
8M0146566	BEARING ASSEMBLY Cup/Cone	90	12	8M0146617	SERVICE MANUAL Diagnostic	2	-
8M0146648	GEAR SET Forward Gear Pinion 12/21	78	5	8M0146648	GEAR SET Forward Gear Pinion 12/21	82	6
8M0146659	GEAR SET Forward Gear Pinion 12/21	86	20	8M0146676	GEAR Reverse	86	10
8M0146696	GEAR SET Forward Pinion 12/21	90	4	8M0146696	GEAR SET Forward Pinion 12/21	94	6
8M0146697	GEAR SET Forward Pinion 13/24	70	5	8M0146697	GEAR SET Forward Pinion 13/24	74	6
8M0146710	PIN Rigging Door	10	31	8M0146861	TOOL Flywheel	104	14
8M0146862	TOOL Stretch Belt	104	15	8M0146902	CABLE ASSEMBLY Starter-Negative	22	18
8M0146934	FITTING Quick Connect	36	7	8M0146935	INSTALLATION TOOL Bearing Spool	104	17
8M0146936	BAR MOUNT PULLER Upper	104	18	8M0146938	GASKET Water Pump Base	70	18
8M0146938	GASKET Water Pump Base	78	18	8M0146938	GASKET Water Pump Base	90	17
8M0146944	DRIVESHAFT ASSEMBLY Cup/Cone	90	8	8M0146953	GROMMET Large Hole, Mechanical	10	30
8M0146953	GROMMET Large Hole, Mechanical	100	-	8M0146954	GROMMET Large Hole, DTS CMS	10	30
8M0146954	GROMMET Large Hole, DTS CMS	100	-	8M0146955	GROMMET Large Hole, DTS	100	-
8M0147046	SPACER ASSEMBLY 10 IN Silver	98	8	8M0147047	SPACER ASSEMBLY 5 IN Silver	98	1
8M0147078	INSTALLATION TOOL Trim Harness	104	20	8M0147116	TOOL GUIDE SEAL DRIVER	104	NS
8M0147117	POWERHEAD GASKET SET	30	-	8M0147118	TOOL Propshaft	104	19
8M0147671	TOOL ALIGNMENT PIN UPPER MOUNT	104	NS	8M0147677	CABLE ASSEMBLY 10 IN	62	30
8M0147749	INTAKE SCREEN	38	16	8M0147749	INTAKE SCREEN	40	16
8M0147750	NUT (M6)	38	10	8M0147750	NUT (M6)	40	10
8M0147844	TILT TUBE	64	12	8M0147857	SHAFT Coupling	68	9
8M0147858	COVER Fuse Box	18	46	8M0147903	SEAL Fuse Box	18	47
8M0147920	DECAL Mercury, Silver	8	2	8M0147976	BEARING MAIN Green	58	2
8M0147977	BEARING MAIN Blue	58	2	8M0147978	BEARING MAIN White	58	2
8M0147979	BEARING MAIN Orange	58	2	8M0148077	BEARING Connecting Rod, Green	58	8
8M0148078	BEARING Connecting Rod, Blue	58	8	8M0148079	BEARING Connecting Rod, White	58	8
8M0148319	BEARING Cup/Cone	74	25	8M0148319	BEARING Cup/Cone	82	24
8M0148319	BEARING Cup/Cone	86	21	8M0148319	BEARING Cup/Cone	94	26
8M0148533	DECAL Latch Position	4	17	8M0148538	DECAL Maintenance Schedule	16	40
8M0148727	CAP Vinyl	60	35	8M0148865	TOOL Install Gear	104	NS
8M0148868	WRENCH AMS Mount	104	NS	8M0149551	POWERHEAD GASKET SET	44	-
8M0149551	POWERHEAD GASKET SET	48	-	8M0149551	POWERHEAD GASKET SET	54	-
8M0149551	POWERHEAD GASKET SET	56	-	8M0149551	POWERHEAD GASKET SET	60	-
8M0149553	TOOL Upper Mount Rod Installation	104	NS	8M0149575	EXHAUST TUBE	60	36
8M0149605	SLEEVE Edge Protector	12	42	8M0149614	BOLT KIT Transom (8.00 Inches)	102	-
8M0149929	100 HR MAINTENANCE KIT V6 and V8 4 stroke	106	-	8M0149931	MAINTENANCE KIT V8 CMS/Seapro/ProXS (300 Hr)	106	-
8M0150214	CYLINDER HEAD ASSEMBLY Starboard	52	1	8M0150215	CYLINDER HEAD ASSEMBLY Port	52	1
8M0150597	TOOL-SHIFT ACTUATOR Test TEE Harness	104	23	8M0150994	FITTING CONNECTOR KIT	102	-
8M0151156	SPACER	24	2	8M0152423	BRACKET Plastic Snap	36	5
8M0152433	FITTING ELBOW	36	6	8M0152436	ORING	36	3
8M0153042	DECAL Mercury, Silver	6	2	8M0153042	DECAL Mercury, Silver	8	8
8M0153610	INTAKE MANIFOLD	40	1	8M0155119	FITTING Legris	68	12
8M0155262	GROMMET TUBE OUTLET	60	19	8M0157114	FITTING TEE 4 MM	16	25
8M0157397	CLAMP Oetiker, 17.5	44	45	8M0160428	PULLER PLATE	104	24
8M0162139	THERMOSTAT ASSEMBLY	106	-	8M0163293	TOOL Chip Catcher	104	25
8M0164967	BUSHING Shift Shaft	70	33	8M0164967	BUSHING Shift Shaft	78	33
8M0164967	BUSHING Shift Shaft	90	32	8M0164968	SHIFT SHAFT Long Includes Bushing Design II	70	39
8M0164968	SHIFT SHAFT Long Includes Bushing Design II	80	39	8M0164968	SHIFT SHAFT Long Includes Bushing Design II	90	36
8M0164969	SHIFT SHAFT X-Long Includes Bushing Design II	80	39	8M0164978	PIN ROD EYE ASSEMBLY	64	22
8M0168203	DRIVESHAFT KIT Long	98	16	8M0168204	DRIVESHAFT KIT Long	98	16
8M0168208	DRIVESHAFT KIT X-Long	98	16	8M2000347	RETAINER	76	31
8M2000347	RETAINER	96	31	8M6000385	CLAMP (39.6 MM)	28	39
8M6001459	CLAMP (45.5)	28	9	8M6001577	O-RING M6 X 46	28	40
8M6002637	BOLT Connecting Rod	58	13	8M6004776	HARNESS ASSEMBLY	34	23

Part No.	Description	Pg.	Ref.no
90196	O-RING (.921 x .139)	28	8
92721	WASHER	90	6
98727	FITTING Grease	64	5
99633	KNOB	64	6
NSS	NOT SOLD SEPARATE SCREW	4	3
NSS	NOT SOLD SEPARATE O-Ring	34	3
NSS	NOT SOLD SEPARATE O-Ring	34	6
NSS	NOT SOLD SEPARATE O-Ring	34	9
NSS	NOT SOLD SEPARATE Seal	34	14
NSS	NOT SOLD SEPARATE Seal	34	18
NSS	NOT SOLD SEPARATE O-Ring	34	25
NSS	NOT SOLD SEPARATE	52	5
92721	WASHER	70	7
98234A2	DRILL FIXTURE KIT Transom	104	NS
99615	PIN Groove	64	15
NSS	NOT SOLD SEPARATE DECAL, EPA	2	-
NSS	NOT SOLD SEPARATE SCREW	4	15
NSS	NOT SOLD SEPARATE Spacer	34	4
NSS	NOT SOLD SEPARATE Seal	34	7
NSS	NOT SOLD SEPARATE Seal	34	11
NSS	NOT SOLD SEPARATE O-Ring	34	15
NSS	NOT SOLD SEPARATE O-Ring	34	24
NSS	NOT SOLD SEPARATE	48	2