Parts Manual

Cat.# 90-895257005

Revised 09-20-2020

Table of Contents

Cat.# 90-895257005

Service/Support Material 1
Cowling 3
Electrical Components 5
Recoil Starter 9
Shift Components 11
Intake Manifold and Fuel Pump 13
Carburetor 15
Camshaft and Oil Pump 17
Intake and Exhaust Valves 19
Cylinder Block 21
Cylinder Head 23
Crankshaft, Pistons and Connecting Rods 25
Tiller Handle 27
Clamp Brackets 29
Swivel Bracket 33
Driveshaft Housing 35
Gear Housing Driveshaft 37
Gear Housing Propeller Shaft 41
Fuel Tank Assembly (6.6 Gallon) 43
Accessories 45
Maintenance Kits 47

Cat.# 90-895257005

Service/Support Material

Ref #	Part Class	Part Number	Description	Comments	Qty	Note
-	0090	895257005	PARTS MANUAL 25HP Seapro 4-Stroke International		1	

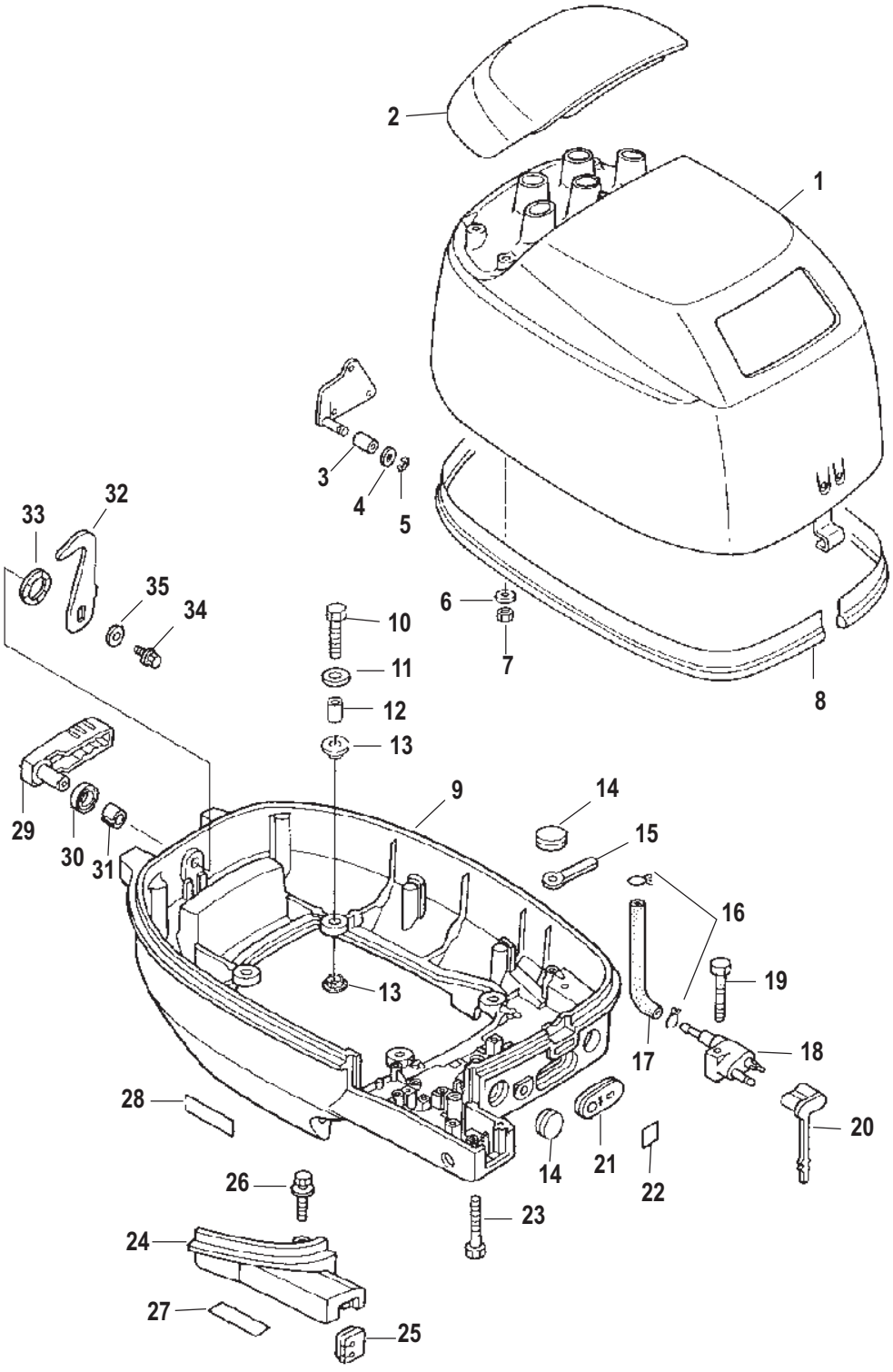
2
1
3
4
5
6
7
8
10
11
12
13
9
14
15
16
19
17
18
20
21
22
14
28
26
23
24
27
25
29
30
31
33
32
35
34
13
3685

Cat.# 90-895257005

Cowling

Ref #	Part Class	Part Number	Description	Comments	Qty	Note
1	0114	803580A12	TOP COWL ASSEMBLY		1	
2	0000	16218009	TILT HANDLE		1	
3	0000	853788001	ROLLER		1	
4	0012	953921	WASHER Stainless Steel		1	
5	0053	953181	E RING		1	
6	0012	953921	WASHER Stainless Steel		4	
7	0011	853722022	NUT		4	
8	0000	895178001	SEAL Rubber		1	
9	2189	853778007	BOTTOM COWL		1	
10	0010	823042044	BOLT		4	
11	0012	161404	WASHER		4	
12	0023	8537154	SPACER		4	
13	0023	8537437	MOUNT Rubber		8	
14	0025	16226	GROMMET		2	
15	0054	8035631	CLAMP		1	
16	0054	95395	CLIP Stainless Steel		2	
17	0032	851848011	TUBING (300 mm)		1	
18	0022	15781A5	CONNECTOR Fuel - Brass		1	
19	0010	82304222	BOLT Stainless Steel		1	
20	0000	878311	CAP		1	
21	0025	162312	GROMMET		1	
22		NSS	NOT SOLD SEPARATE Decal-Oil Pressure		1	
23	0010	823042053	BOLT		3	
24	0000	895174001	COVER		1	
25	0025	895175002	GROMMET		1	
26	0010	82304230	BOLT		1	
27	0037	802987001	DECAL F, N, R		1	
28		NSS	NOT SOLD SEPARATE Decal Storage		1	
29	0000	817015003	LATCH Cowl		1	
30	0026	16219	SEAL		1	
31	0023	163365	BUSHING		1	
32	0000	16222003	HOOK Cover		1	
33	0013	16221	WAVE WASHER		1	
34	0010	82304234	BOLT		1	
35	0012	953921	WASHER Stainless Steel		1	
-	0037	895763A05	DECAL SET		1	

Electrical Components

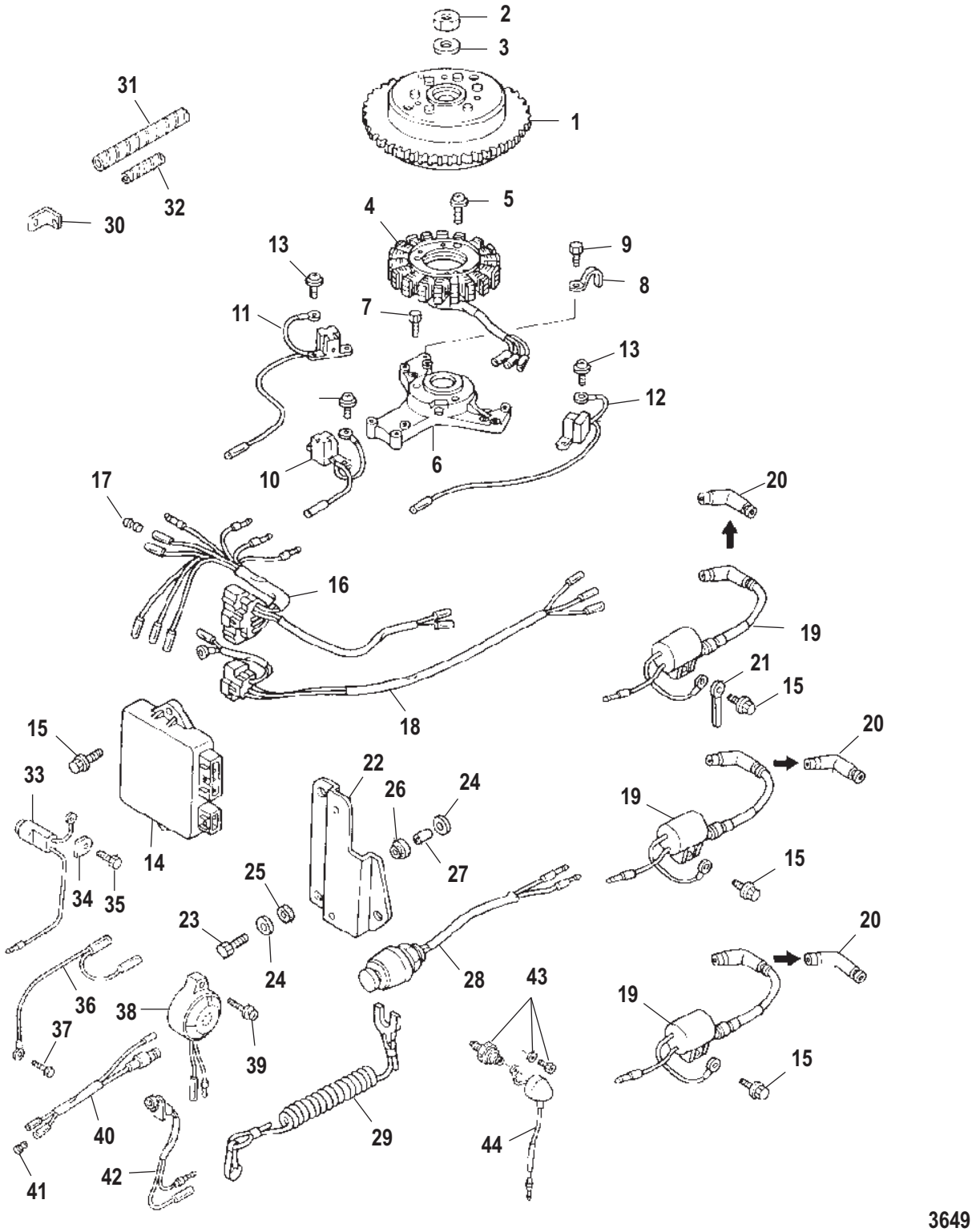

Cat.# 90-895257005

Electrical Components

Ref #	Part Class	Part Number	Description	Comments	Qty	Note
1	0262	803577002	FLYWHEEL		1	
2	0011	851832	NUT		1	
3	0012	8539911	WASHER		1	
4	0000	16058003	STATOR		1	
5	0010	853536001	SCREW		3	
6	0000	895267	BRACKET Coil		1	
7	0010	82304224	BOLT		3	
8	0054	95306	CLAMP		2	
9	0010	162231	BOLT		1	
10	0000	835395001	COIL Pulser		1	
11	0000	835395002	COIL Pulser		1	
12	0000	835395003	COIL Pulser		1	
13	0010	878388001	SCREW		6	
14	0000	835401003	CD UNIT		1	
15	0010	82304233	BOLT		5	
16	0084	895121A02	HARNESS ASSEMBLY CD		1	
17	0019	853994	PLUG		1	
18	0084	895121A03	HARNESS ASSEMBLY CD		1	
19	0339	803559A03	COIL ASSEMBLY Ignition		3	
20	0085	803560002	CAP Plug		3	
21	0054	8035631	CLAMP		1	
22	0000	835403004	PLATE CD Unit		1	
23	0010	825702002	BOLT Stainless Steel		3	
24	0012	953921	WASHER Stainless Steel		6	
25	0012	953923	WASHER Rubber		3	
26	0025	851815005	GROMMET		3	
27	0023	952868	COLLAR		3	
28	0087	823037A2	SWITCH ASSEMBLY Stop - Lanyard		1	
29	0000	823054	LANYARD		1	[1]
30	0000	892779	BRACKET		1	
31	0032	895108002	SLEEVE Protective		1	
32	0032	895108003	SLEEVE Protective		2	
33	0000	895268	SENSOR Overheat		1	
34	0000	803762	CLAMP		1	
35	0010	17174	BOLT		1	
36	0084	895122A01	CABLE ASSEMBLY		1	
37	0010	162231	BOLT		1	
38	0000	802996001	BUZZER Overheat		1	
39	0010	855544012	SCREW		1	
40	0084	824372A04	CABLE ASSEMBLY Red		1	
41	0019	853994001	PLUG		1	
42	0000	804057001	PILOT LAMP		1	
43	0087	803538	SWITCH ASSEMBLY Oil Pressure		1	
44	0084	803539001	WIRE Lead		1	

Electrical Components

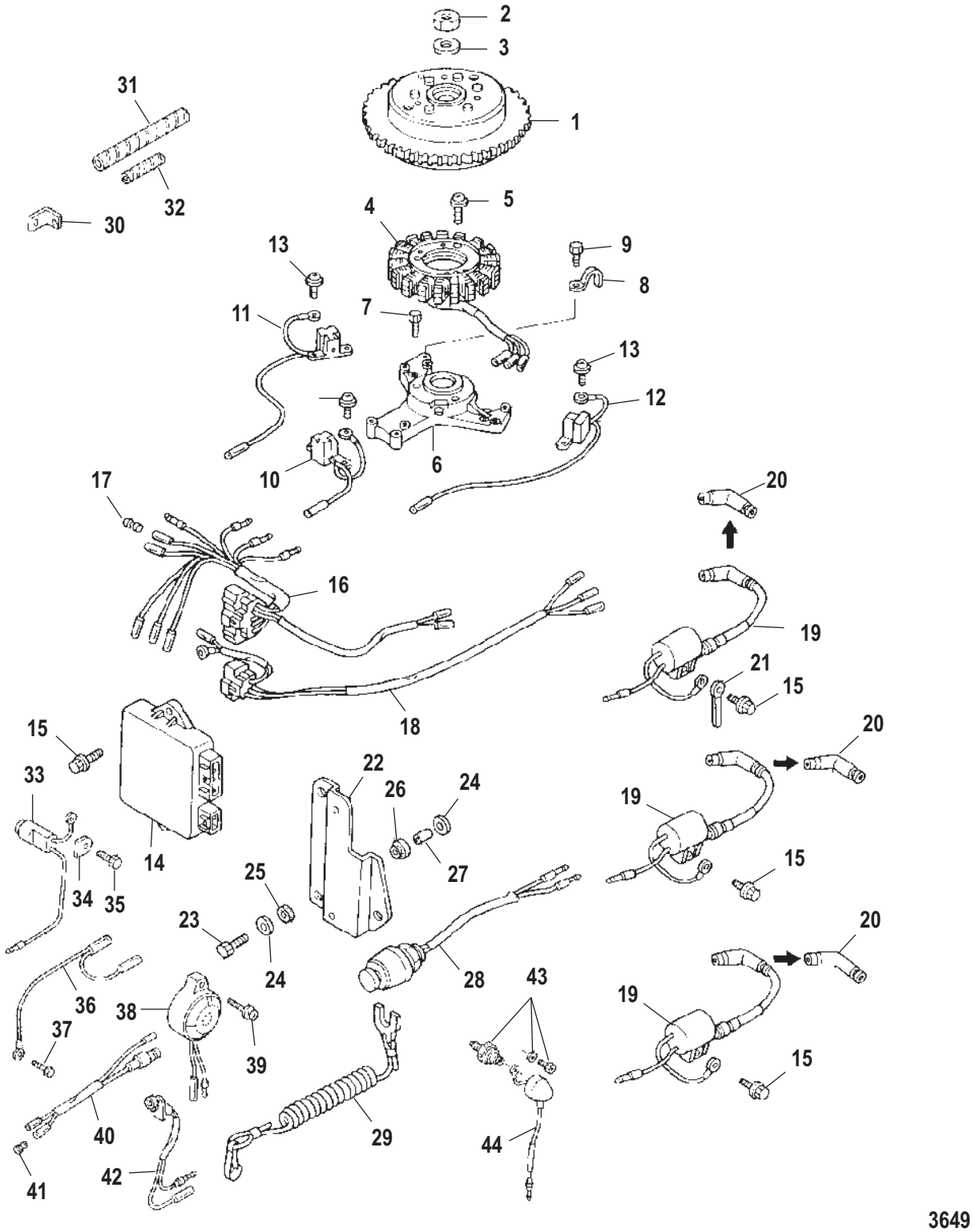

Cat.# 90-895257005

Electrical Components

PART NOTES:

[1] - Alternate part numbers:

823054Service Part

823054QQS

Recoil Starter

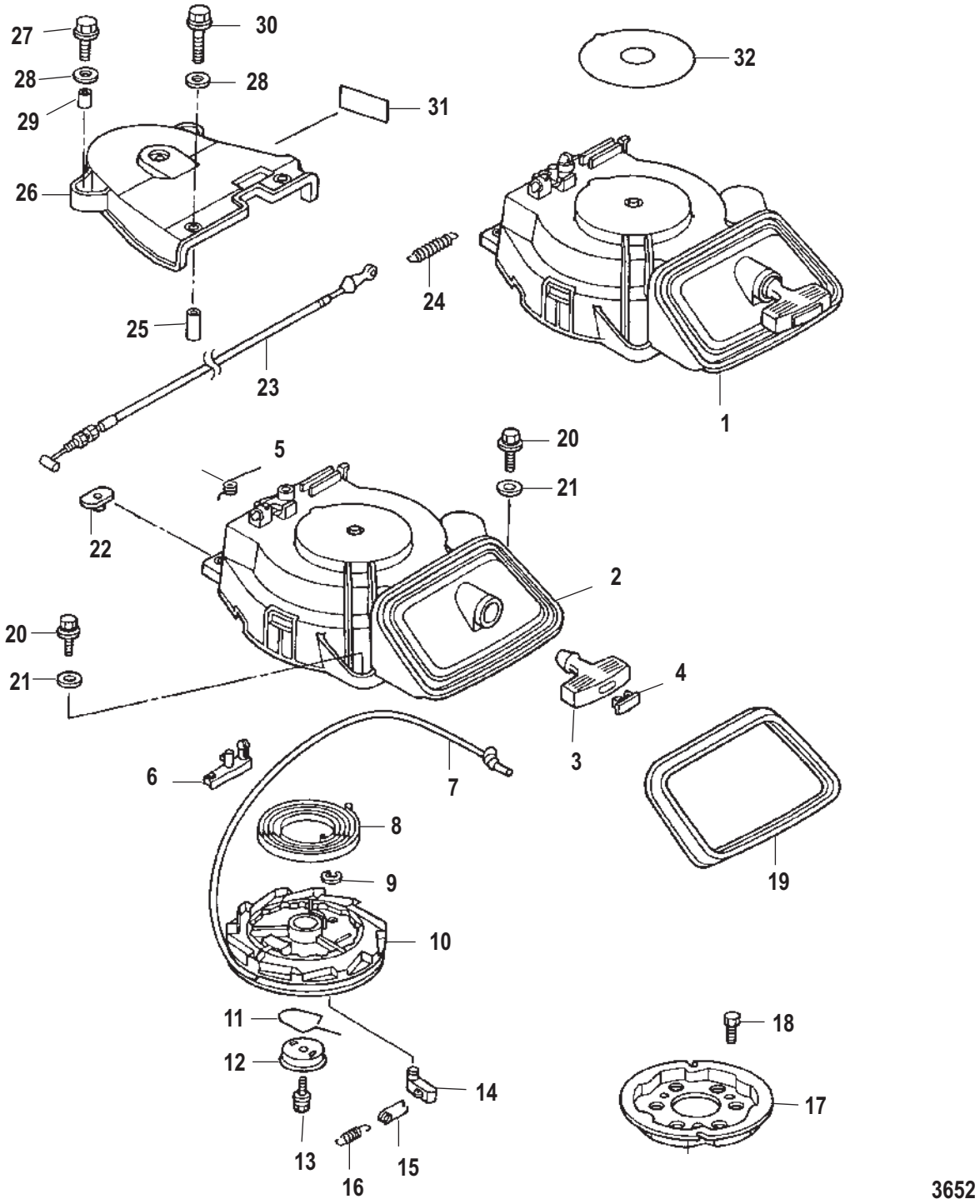

Cat.# 90-895257005

Recoil Starter

Ref #	Part Class	Part Number	Description	Comments	Qty	Note
1	0000	803716A05	STARTER ASSEMBLY Recoil		1	
2	0000	803716005	HOUSING Starter		1	
3	0000	804029	HANDLE Starter		1	
4	0000	853755002	CAP Starter Handle		1	
5	0024	812645008	SPRING		1	
6	0000	804031002	LOCK Starter		1	
7	0050	850057003	ROPE Starter		1	
8	0024	804024008	SPRING Starter		1	
9	0053	852784001	E RING		1	
10	0000	803717002	REEL		1	
11	0024	852778010	SPRING Friction		1	
12	0000	812638002	PLATE Friction		1	
13	0010	812637002	BOLT		1	
14	0000	812635003	RATCHET		1	
15	0000	803718002	RATCHET GUIDE		1	
16	0024	812634004	SPRING Return		1	
17	0000	804035001	PULLEY Starter		1	
18	0010	804368	BOLT Stainless Steel		3	
19	0000	824995004	SEAL Rubber		1	
20	0010	823042040	BOLT Stainless Steel		3	
21	0012	953921	WASHER Stainless Steel		3	
22	0011	856949001	NUT		2	
23	0000	895131A03	CABLE ASSEMBLY Starter		1	
24	0024	812645009	SPRING		1	
25	0023	855545002	COLLAR		2	
26	0000	895133001	COVER Belt		1	
27	0010	823042040	BOLT Stainless Steel		2	
28	0012	953921	WASHER Stainless Steel		4	
29	0023	952868	COLLAR		2	
30	0010	4000330	SCREW (M6 x 25)		2	
31		878369	DECAL Spark Plug		1	
32		NSS	NOT SOLD SEPARATE Caution Lable B		1	

Shift Components

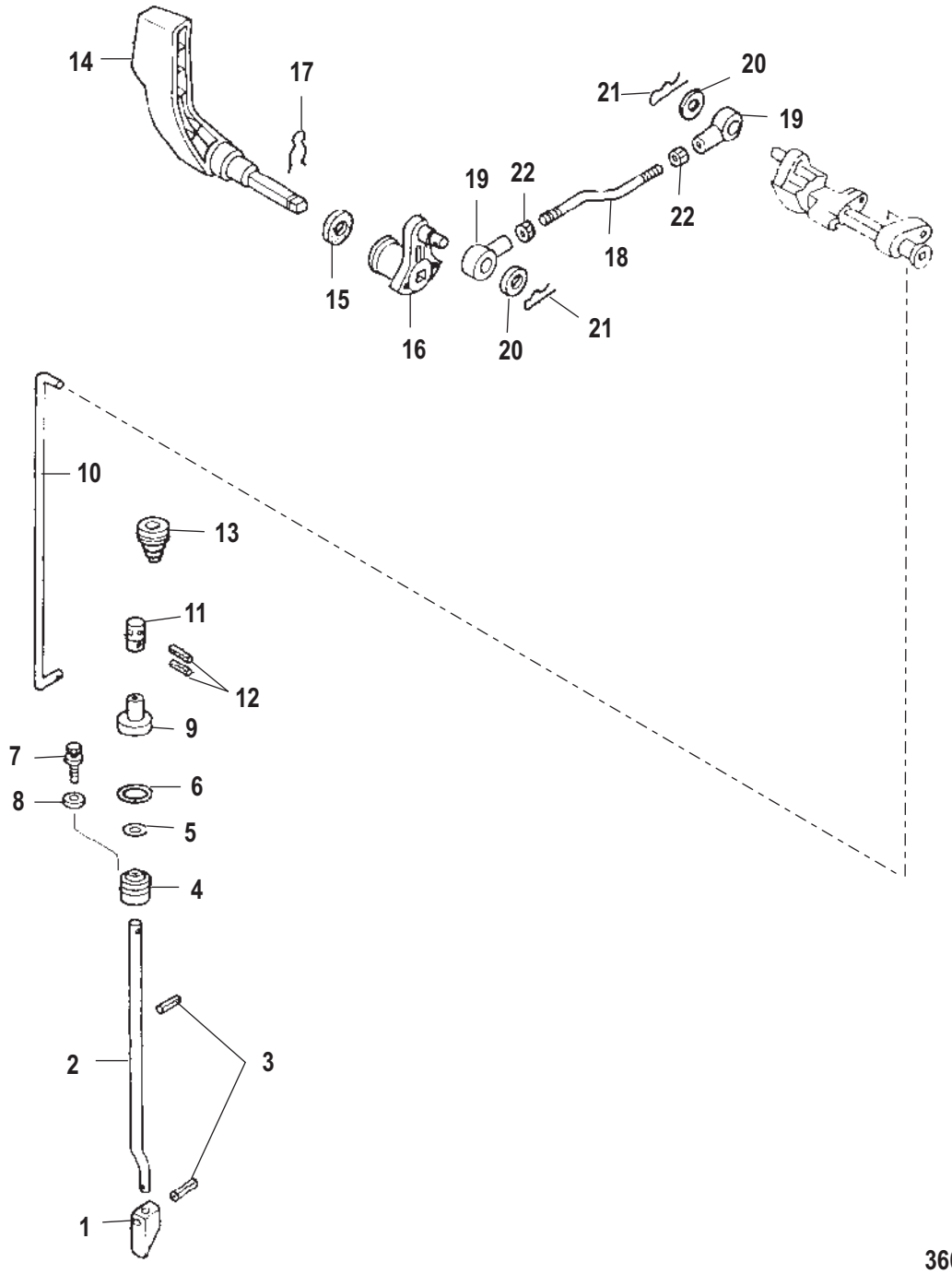

Cat.# 90-895257005

Shift Components

Ref #	Part Class	Part Number	Description	Comments	Qty	Note
1	0000	161722	CAM		1	
2	0000	803760006	ROD Cam	(Short)	1	
2	0000	803760007	ROD Cam	(Long)	1	
3	0017	16179	PIN		2	
4	0023	16176007	BUSHING		1	
5	0025	161772	O-RING		1	[1]
6	0025	161782	O-RING		1	[1]
7	0010	82304234	BOLT		1	
8	0012	953921	WASHER Stainless Steel		1	
9	0000	853794	RETAINER		1	
10	0000	803766004	ROD Shift		1	
11	0000	803767003	ROD Joint Shift		1	
12	0017	952189	PIN Dowel		2	
13	0025	16823	GROMMET		1	
14	0000	803763003	LEVER Shift		1	
15	0026	16219	SEAL		1	
16	0000	851862001	SHIFT ARM		1	
17	0054	851863	CLIP		1	
18	0000	803768004	LEVER Rod Shift		1	
19	0000	892775	JOINT Cable		2	
20	0012	953925	WASHER		2	
21	0018	8150262	COTTER PIN		2	
22	0011	8537225	NUT		2	
-	0027	804908A01	GASKET SET Gearcase		1	

PART NOTES:

[1] - COMPONENT OF LOWER UNIT GASKET SET804908A01

Intake Manifold and Fuel Pump

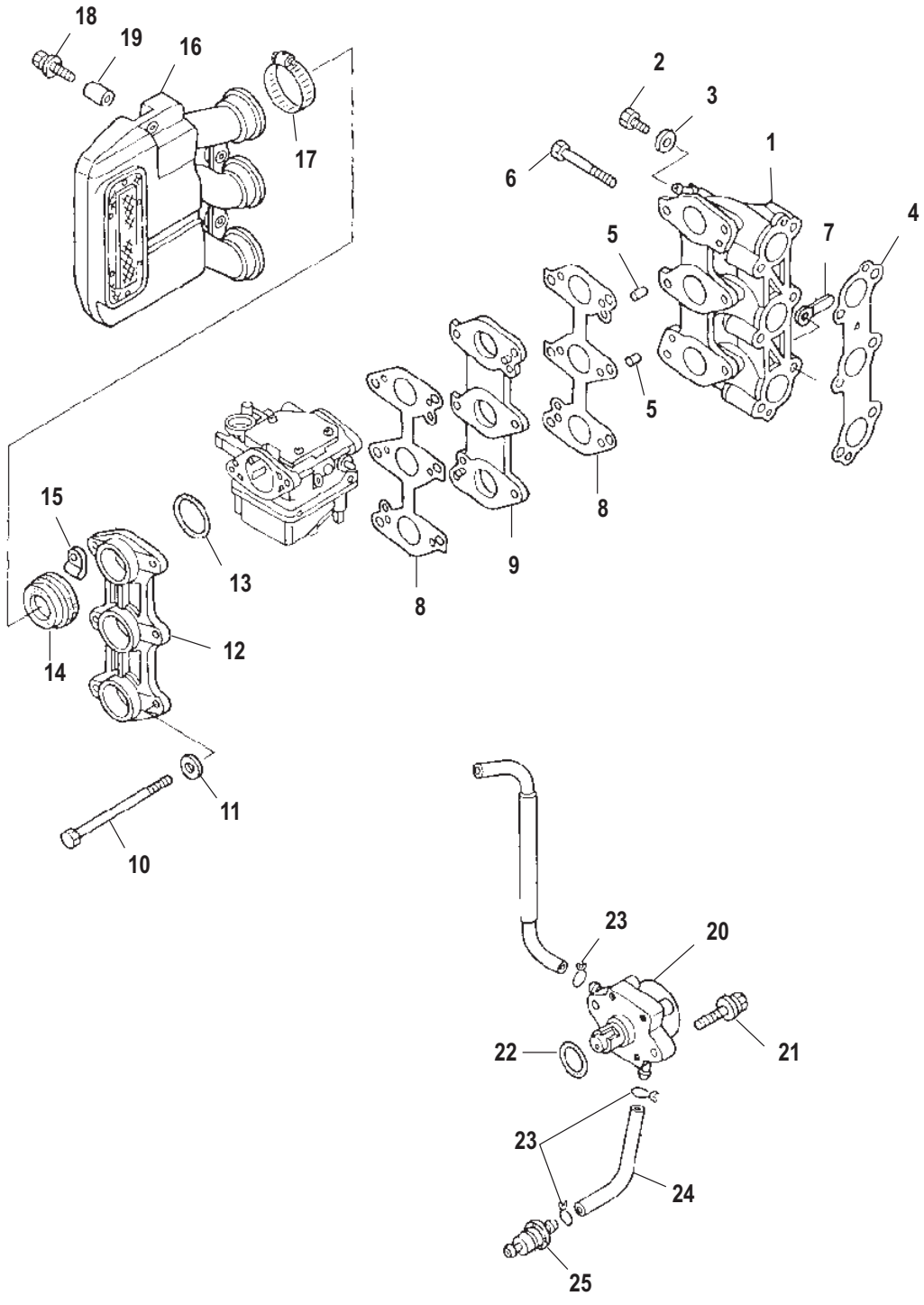

Cat.# 90-895257005

Intake Manifold and Fuel Pump

Ref #	Part Class	Part Number	Description	Comments	Qty	Note
1	0000	804887001	MANIFOLD Inlet		1	
2	0010	853531004	BOLT		3	
3	0012	895106002	WASHER		3	
4	0027	853525002	GASKET		1	[1]
5	0017	16119	PIN Dowel		2	
6	0010	823042046	BOLT		6	
7	0054	95306	CLAMP		1	
8	0027	16327001	GASKET Carburetor		2	[1]
9	0000	853526002	INSULATOR		1	
10	0010	855809001	BOLT		6	
11	0012	895106	WASHER Stainless Steel		6	
12	0000	853526003	FLANGE Air Silencer		1	
13	0025	825057005	O-RING		3	[1]
14	0026	855560001	SEAL Rubber		3	
15	0054	953951	CLAMP		1	
16	0000	853728002	SILENCER Air		1	
17	0054	853798001	CLAMP		3	
18	0010	82304233	BOLT		3	
19	0023	952868	COLLAR		3	
20	0000	803529A04	PUMP Fuel		1	
21	0010	825702002	BOLT Stainless Steel		2	
22	0025	161313	O-RING		1	
23	0054	95395	CLIP Stainless Steel		3	
24	0032	851848010	TUBING Rubber (160 mm)		1	
25	0035	16248	FILTER Fuel		1	
-	0027	835427A05	GASKET SET Powerhead		1	

PART NOTES:

[1] - COMPONENT OF ENGINE/POWERHEAD GASKET SET 835427A05

Carburetor

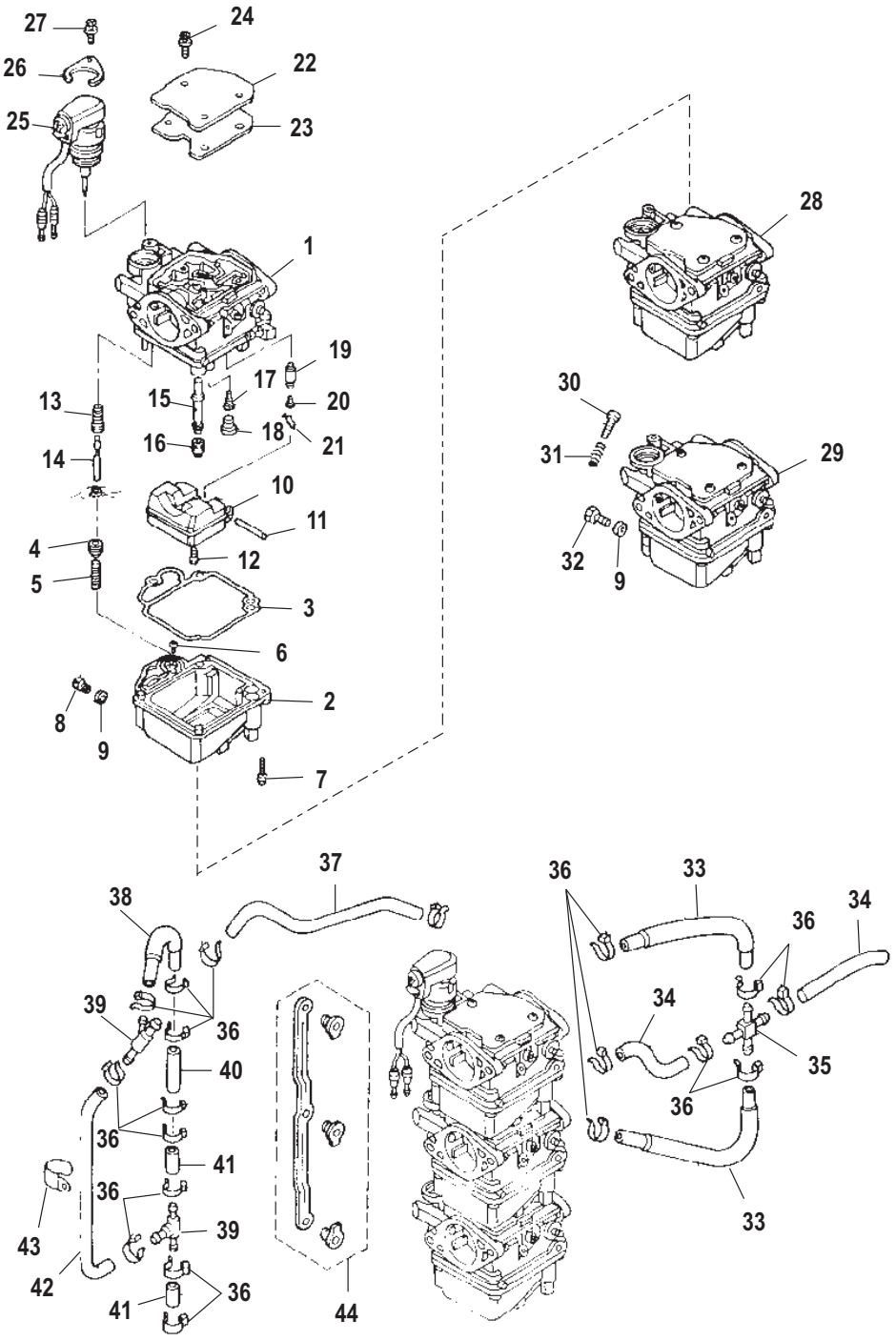

3636

Cat.# 90-895257005

Carburetor

Ref #	Part Class	Part Number	Description	Comments	Qty	Note
1	3303	895110A05	CARBURETOR Upper		1	
2	0000	802690005	FLOAT	(Bowl Upper)	1	
2	0000	802690006	FLOAT	(Bowl Center)	1	
2	0000	802690007	FLOAT	(Bowl Lower)	1	
3	0027	802699003	GASKET Float Bowl		1	
4	0000	853830002	PLUNGER		1	
5	0024	895116001	SPRING		1	
6	0010	895136001	SCREW		1	
7	0010	162601	SCREW		4	
8	0010	803509015	SCREW Drain		1	
9	0027	855567003	GASKET		1	
10	0000	16253004	FLOAT		1	
11	0017	16256004	FLOAT Arm Pin		1	
12	0010	16196001	SCREW		1	
13	0000	895115001	BOOT Rubber		1	
14	0000	853746003	ROD Link		1	
15	0000	802700005	NOZZLE Main		1	
16	0000	802701006	JET Main #82		1	
17	0000	803689004	JET Slow #45		1	
18	0000	16252	CAP		1	
19	0000	809570003	VALVE Float		1	
20	0000	853721	PIN Valve		1	
21	0054	16255	CLIP		1	
22	0000	855540003	COVER Carburetor		1	
23	0027	855541004	GASKET		1	
24	0010	855542	SCREW		3	
25	0000	854254004	ENRICHENER		1	
26	0000	854255001	PLATE		1	
27	0010	855542	SCREW		1	
28	3303	895110A06	CARBURETOR Center		1	
29	3303	895110A07	CARBURETOR Lower		1	
30	0010	16263	SCREW		1	
31	0024	16264002	SPRING		1	
32	0010	803509016	SCREW Drain		1	
33	0032	895153005	HOSE Rubber		2	
34	0032	895153003	HOSE Rubber		2	
35	0022	812960004	CONNECTOR		1	
36	0054	816311T	TIE STRAP (8.00 Inches)		19	
37	0032	895153004	HOSE Rubber		1	
38	0032	895153008	HOSE Rubber		1	
39	0022	73318002	TEE Fitting		2	
40	0032	895153002	HOSE Rubber		1	
41	0032	895153006	HOSE Rubber		2	
42	0032	895153007	HOSE Rubber		1	
43	0054	953951	CLAMP		1	
44	0000	853761001	LEVER Link Components		1	

Camshaft and Oil Pump

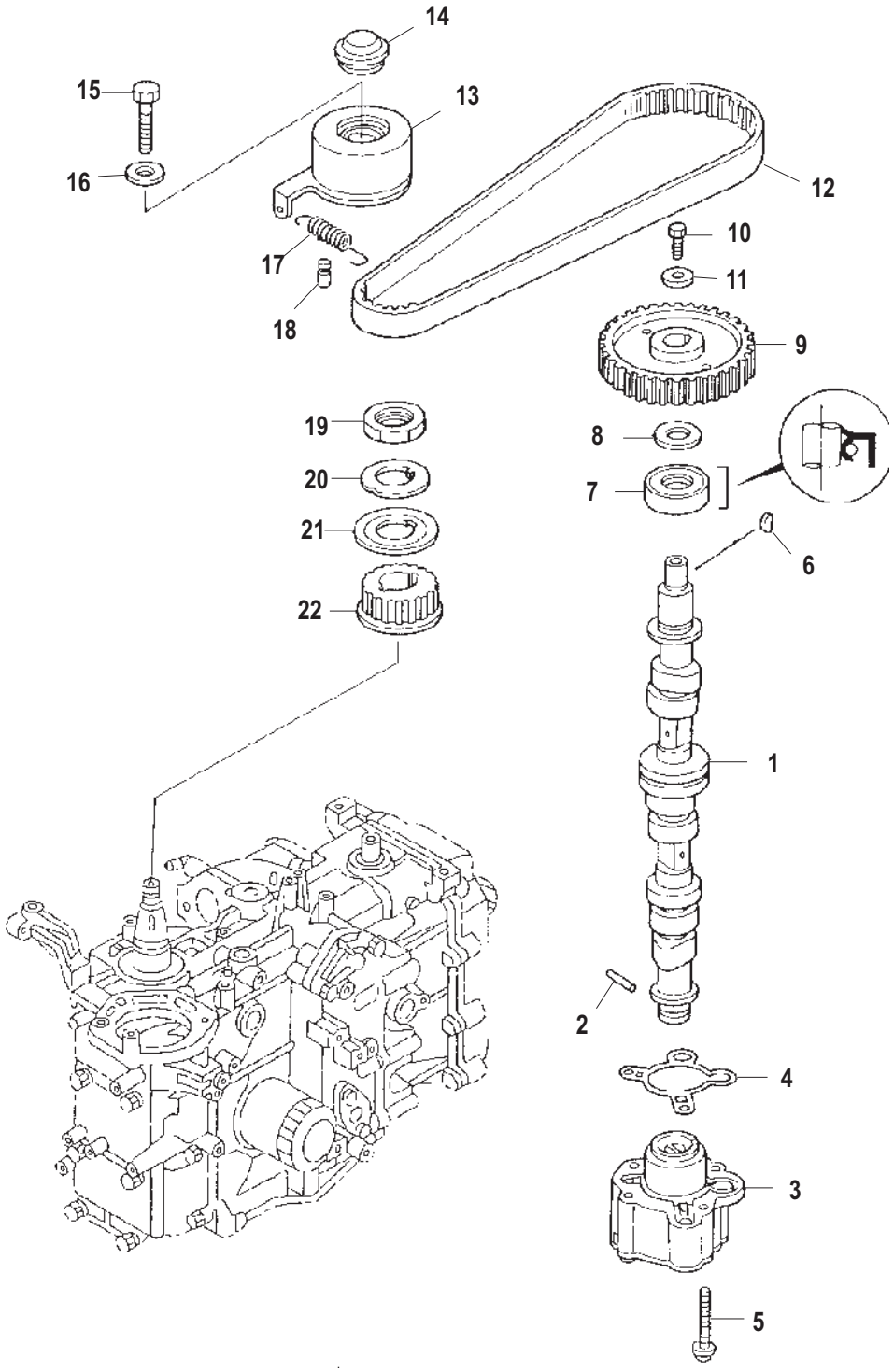

Cat.# 90-895257005

Camshaft and Oil Pump

Ref #	Part Class	Part Number	Description	Comments	Qty	Note
1	0000	834956002	CAMSHAFT		1	[1]
2	0017	95218015	PIN Camshaft		1	[1]
3	0000	834967004	PUMP Oil		1	
4	0027	853523002	GASKET		1	[2]
5	0010	850879002	SCREW		3	
6	0028	95229	KEY		1	
7	0026	825455001	SEAL Oil		1	[2]
8	0012	895118003	WASHER		1	
9	0043	834973002	PULLEY Driven		1	[1]
10	0010	16705	BOLT		1	
11	0012	895118	WASHER		1	
12	0057	895120001	TIMING BELT		1	
13	0000	895265	TENSIONER Belt		1	
14	0000	895266	COVER TENSIONER		1	
15	0010	803876001	BOLT		1	
16	0012	895141	WASHER Stainless Steel		1	
17	0024	815093002	SPRING Tensioner		1	
18	0000	851845001	HOOK		1	
19	0011	855679002	NUT		1	
20	0013	823032001	LOCKWASHER		1	
21	0000	895119001	PLATE		1	
22	0043	834955002	PULLEY Drive		1	
-	0027	835427A05	GASKET SET Powerhead		1	
-	0000	895188A05	POWERHEAD ASSEMBLY		1	

PART NOTES:

[1] - COMPONENT OF POWERHEAD/PARTIAL ENGINE895188A05

[2] - COMPONENT OF ENGINE/POWERHEAD GASKET SET 835427A05

Intake and Exhaust Valves

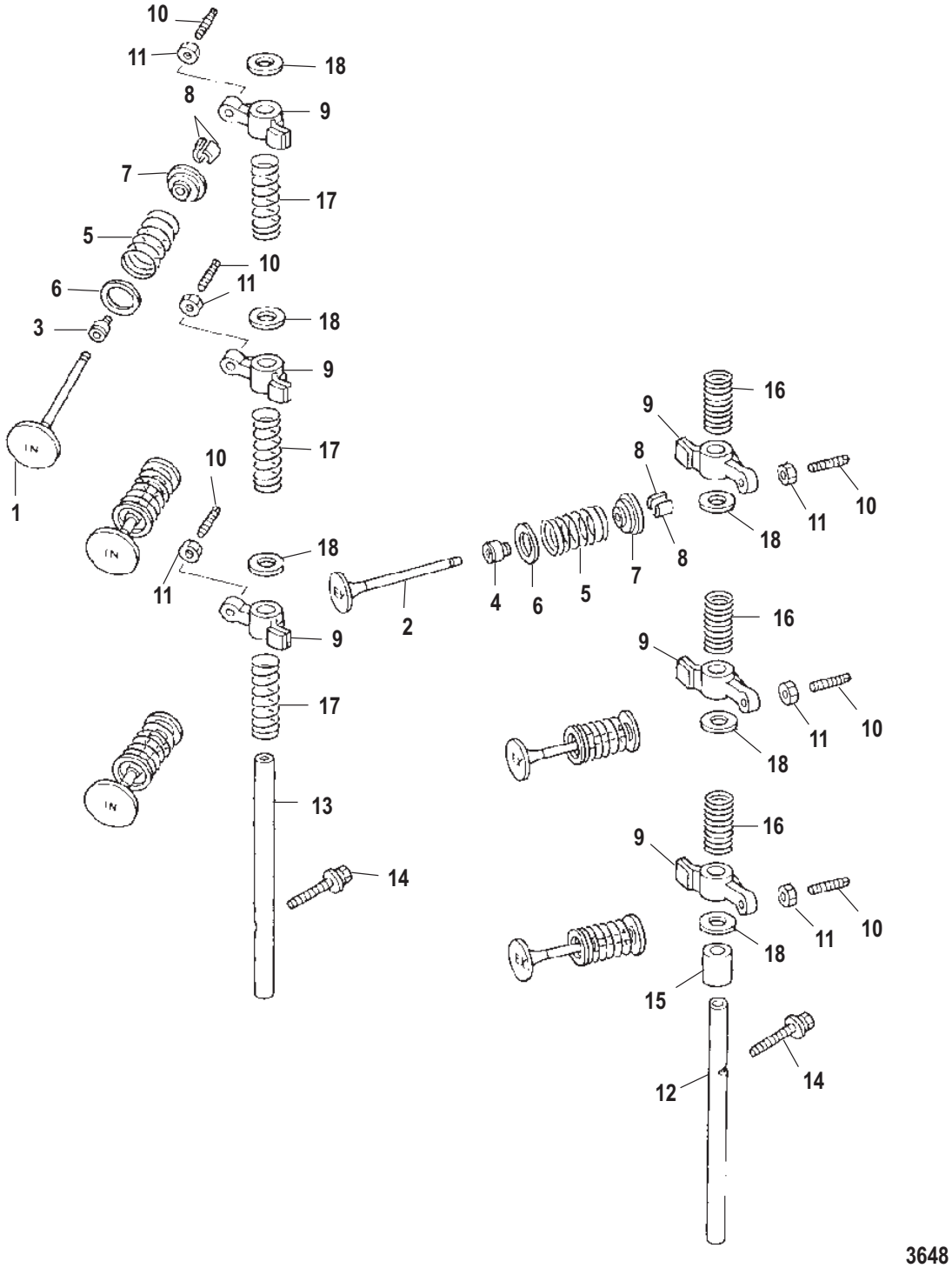

Cat.# 90-895257005

Intake and Exhaust Valves

Ref #	Part Class	Part Number	Description	Comments	Qty	Note
1	0000	850838002	VALVE Intake		3	[1]
2	0000	850839002	VALVE Exhaust		3	[1]
3	0026	822647001	SEAL Intake - Black		3	[1]
4	0026	822647002	SEAL Exhaust - Green		3	[1]
5	0024	8035544	SPRING		6	[1]
6	0000	803598	SEAT		6	[1]
7	0000	803555	RETAINER		6	[1]
8	0028	803556	KEEPER Valve		12	[1]
9	0000	850841003	ARM Rocker		6	[1]
10	0010	825046001	SCREW Adjusting		6	[1]
11	0011	826150001	NUT Adjusting		6	[1]
12	0000	850842002	SHAFT Rocker		1	[1]
13	0000	850842003	SHAFT Rocker		1	[1]
14	0010	823042036	BOLT		2	[1]
15	0000	825451001	COLLAR		1	[1]
16	0024	825452002	SPRING		3	[1]
17	0024	825453001	SPRING		3	[1]
18	0012	895118001	WASHER		6	[1]
-	0000	895188A05	POWERHEAD ASSEMBLY		1	

PART NOTES:

[1] - COMPONENT OF POWERHEAD/PARTIAL ENGINE895188A05

Cylinder Block

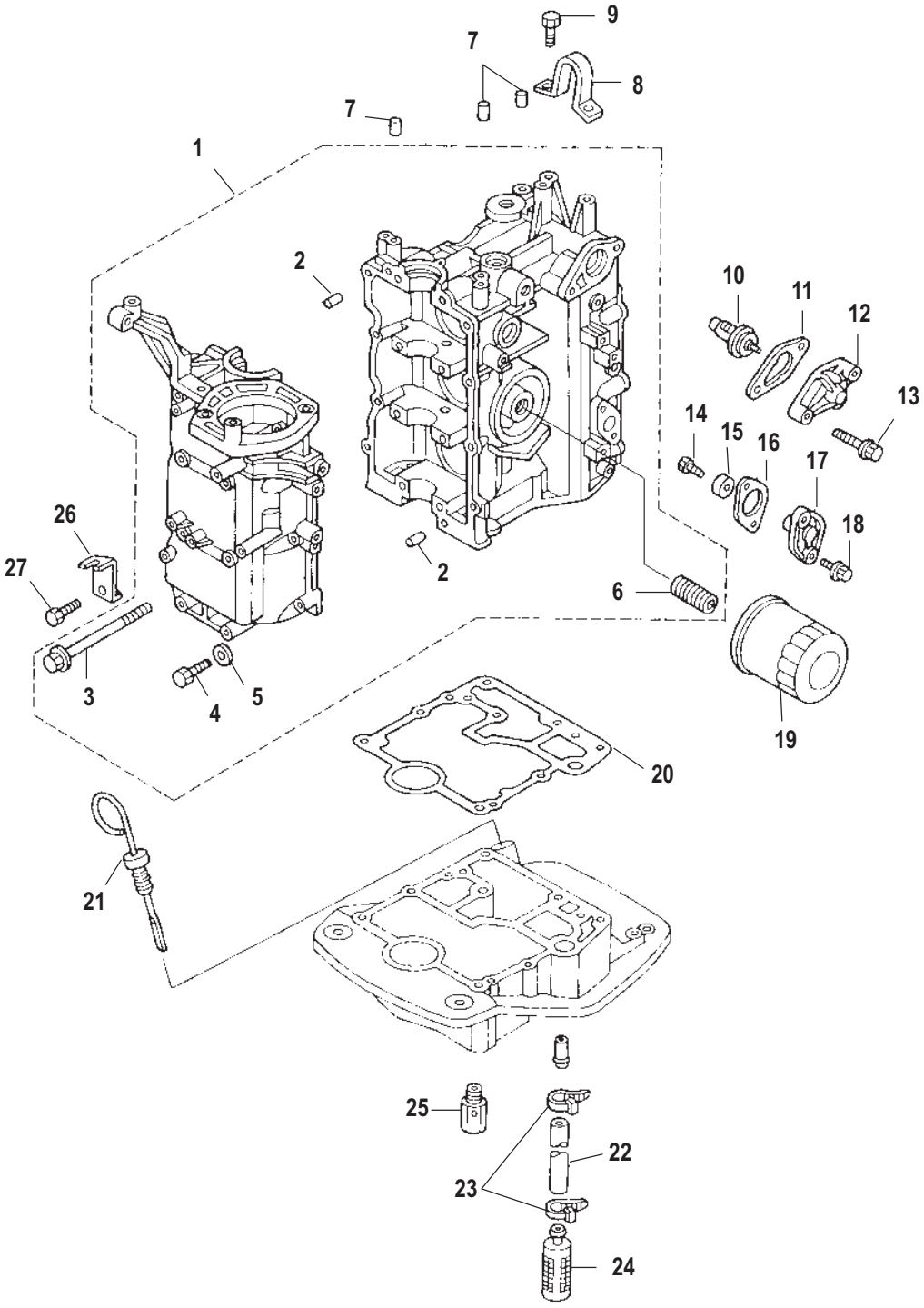

Cat.# 90-895257005

Cylinder Block

Ref #	Part Class	Part Number	Description	Comments	Qty	Note
1	0878	815013A07	CYLINDER BLOCK		1	[1]
2	0017	16119	PIN Dowel		2	[1]
3	0010	855677003	BOLT		8	[1]
4	0010	853531003	BOLT		8	[1]
5	0012	895106	WASHER Stainless Steel		8	[1]
6	0010	855677004	BOLT		1	[1]
7	0017	16119	PIN Dowel		3	
8	0000	855550001	EYE Lifting		1	
9	0010	16830009	BOLT		2	
10	0000	855676002	THERMOSTAT 60 Degrees		1	[1]
11	0027	853702005	GASKET		1	[2]
12	0000	8537052	CAP Thermostat		1	[1]
13	0010	82304224	BOLT		2	[1]
14	0010	823042037	BOLT		1	[1]
15	0097	823912	ANODE		1	[1]
16	0027	895150	GASKET		1	[2]
17	0000	895151	PLUG Anode		1	[1]
18	0010	82304233	BOLT		2	[1]
19	0035	851847A02	FILTER ASSEMBLY Oil	(Mercury)	1	[1]
19	0035	822626Q03	FILTER ASSEMBLY Oil	(Quicksilver)	AR	[3]
20	0027	835427004	GASKET		1	[4]
21	0000	803512002	DIPSTICK		1	
22	0032	895153001	HOSE Rubber (220 mm)		1	
23	0054	816311T	TIE STRAP (8.00 Inches)		2	
24	0035	895152001	STRAINER Oil		1	
25	0000	803535002	PLUNGER		1	
26	0000	853752002	BRACKET		1	
27	0010	16223	BOLT (M6 x 14)		1	
-	0027	835427A05	GASKET SET Powerhead		1	
-	0000	895188A05	POWERHEAD ASSEMBLY		1	

PART NOTES:

[1] - COMPONENT OF POWERHEAD/PARTIAL ENGINE895188A05

[2] - COMPONENT OF POWERHEAD/PARTIAL ENGINE895188A05
COMPONENT OF ENGINE/POWERHEAD GASKET SET 835427A05

[3] - Alternate part numbers:

822626K03MPP

822626Q03QS

[4] - COMPONENT OF ENGINE/POWERHEAD GASKET SET 835427A05

Cylinder Head

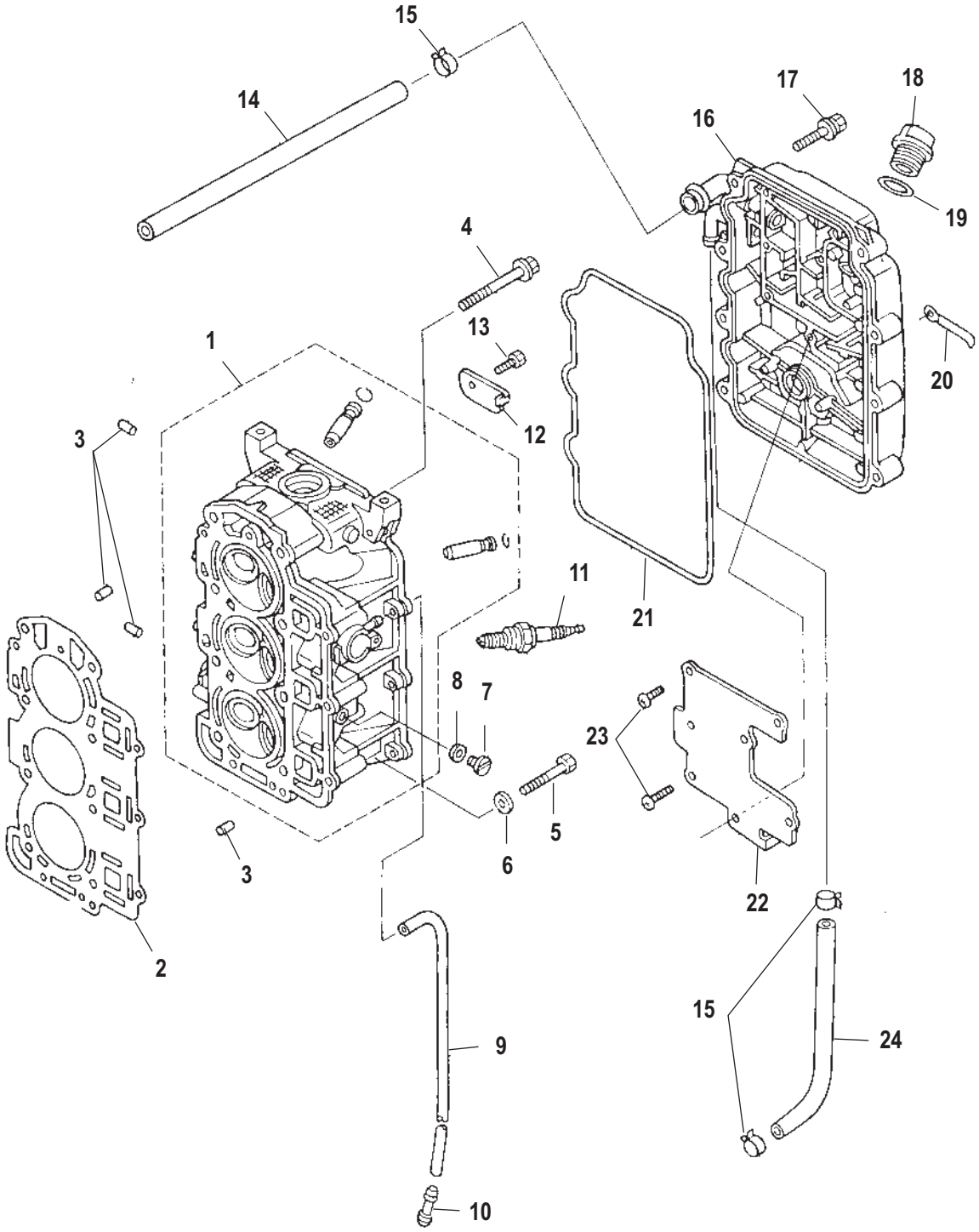

Cat.# 90-895257005

Cylinder Head

Ref #	Part Class	Part Number	Description	Comments	Qty	Note
1	0900	835430A04	CYLINDER HEAD ASSEMBLY		1	[1]
2	0027	850836002	GASKET		1	[2]
3	0017	16119	PIN Dowel		4	[1]
4	0010	855677002	BOLT		8	[1]
5	0010	853531001	BOLT Cylinder Head		3	[1]
6	0012	895106	WASHER Stainless Steel Cylinder Head Cover		3	[1]
7	0022	953683	PLUG		1	[1]
8	0027	95220	GASKET		1	[1]
9	0032	851848009	TUBING (450 mm)		1	
10	0022	8129603	NIPPLE		1	
11	0033	803507	SPARK PLUG (NGK#DCPR6E)		3	
12	0000	853756001	PLATE		1	[1]
13	0010	16828	BOLT		1	[1]
14	0032	812940006	PIPE Oil (330 mm) To Air Silencer		1	
15	0054	803525001	CLIP		3	
16	0000	834954002	COVER Cylinder Head		1	[1]
17	0010	16830A1	SCREW KIT		8	[1]
18	0000	859578A02	CAP ASSEMBLY Oil Filler		1	[1]
19	0025	803513007	O-RING		1	[2]
20	0054	95306	CLAMP		1	[1]
21	0027	803508018	GASKET		1	[2]
22	0000	834974001	PLATE Breather		1	[1]
23	0010	823031016	SCREW		7	[1]
24	0032	812940007	HOSE Rubber (290 mm) To Engine Base		1	
-	0027	835427A05	GASKET SET Powerhead		1	
-	0000	895188A05	POWERHEAD ASSEMBLY		1	

PART NOTES:

[1] - COMPONENT OF POWERHEAD/PARTIAL ENGINE895188A05

[2] - COMPONENT OF POWERHEAD/PARTIAL ENGINE895188A05
COMPONENT OF ENGINE/POWERHEAD GASKET SET 835427A05

Crankshaft, Pistons and Connecting Rods

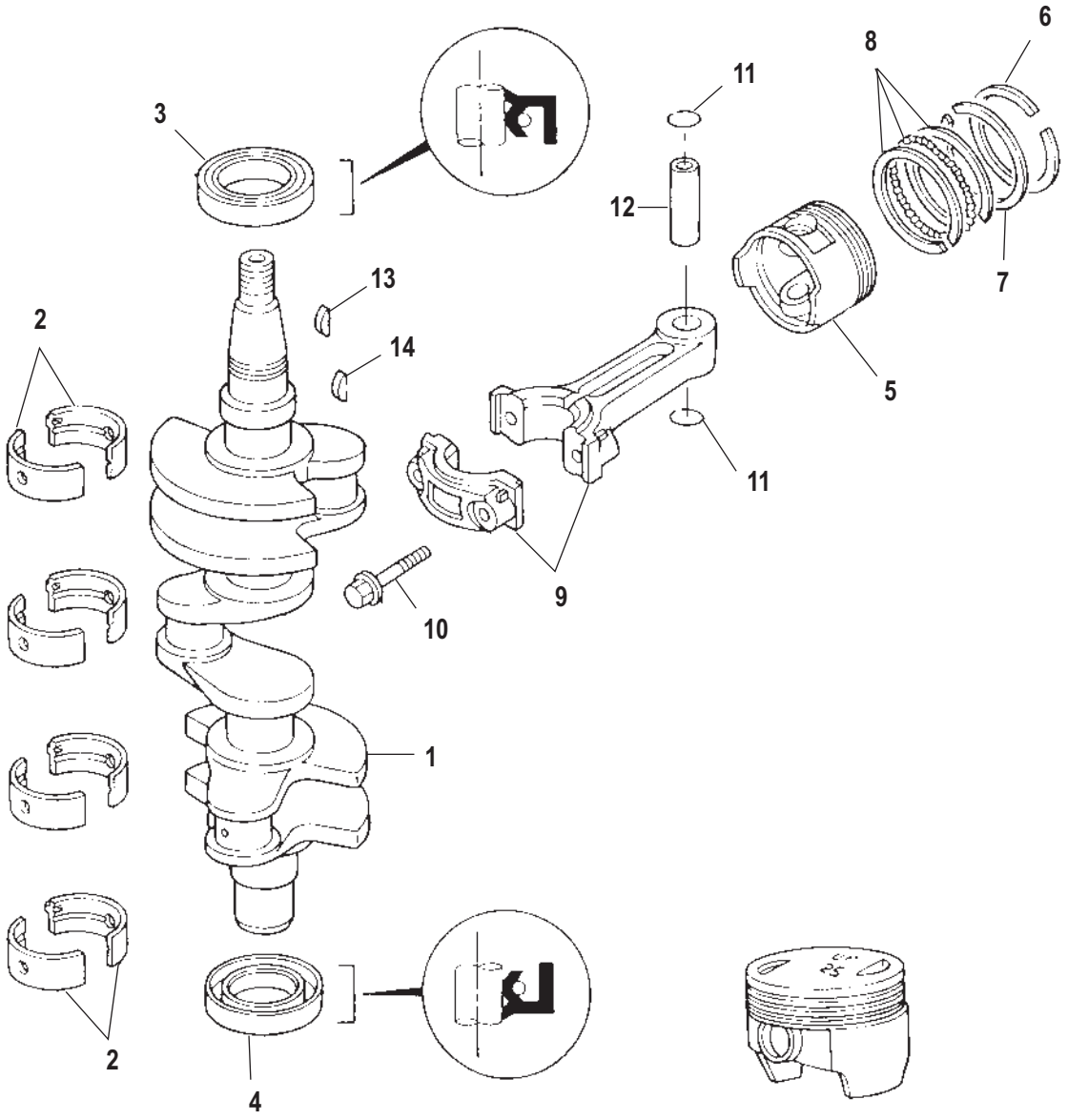

3634

Cat.# 90-895257005

Crankshaft, Pistons and Connecting Rods

Ref #	Part Class	Part Number	Description	Comments	Qty	Note
1	0400	834957A02	CRANKSHAFT		1	[1]
2	0031	834960009	BEARING	(Red)	8	[1]
2	0031	834960010	BEARING	(Blue)	8	[1]
3	0026	855681002	SEAL Oil Upper		1	[2]
4	0026	855681003	SEAL Oil Lower		1	[2]
5	0700	834963002	PISTON	(Standard)	3	[1]
5	0700	834963003	PISTON	(0.5 MM Oversize)	OPT	
-	0039	803518A03	RING SET Piston	(Standard)	1	[1]
-	0039	803518A04	RING SET Piston	(0.5 MM Oversize)	1	
6	0039	803518	RING Piston - Top	(Standard)	3	[1]
6	0039	8035181	RING Piston - Top	(0.5 MM Oversize)	OPT	
7	0039	803519	RING Piston - Second	(Standard)	3	[1]
7	0039	8035191	RING Piston - Second	(0.5 MM Oversize)	OPT	
8	0026	803520	RING Oil	(Standard)	3	[1]
8	0026	8035201	RING Oil	(0.5 MM Oversize)	OPT	
9	0600	834961003	ROD Connecting		3	[1]
10	0010	8035092	BOLT		6	[1]
11	0053	160573	E RING		6	[1]
12	0041	803521	PIN Piston		3	[1]
13	0028	160531	KEY		1	
14	0028	825666001	KEY		1	
-	0027	835427A05	GASKET SET Powerhead		1	
-	0000	895188A05	POWERHEAD ASSEMBLY		1	

PART NOTES:

[1] - COMPONENT OF POWERHEAD/PARTIAL ENGINE895188A05

[2] - COMPONENT OF POWERHEAD/PARTIAL ENGINE895188A05
COMPONENT OF ENGINE/POWERHEAD GASKET SET 835427A05

Tiller Handle

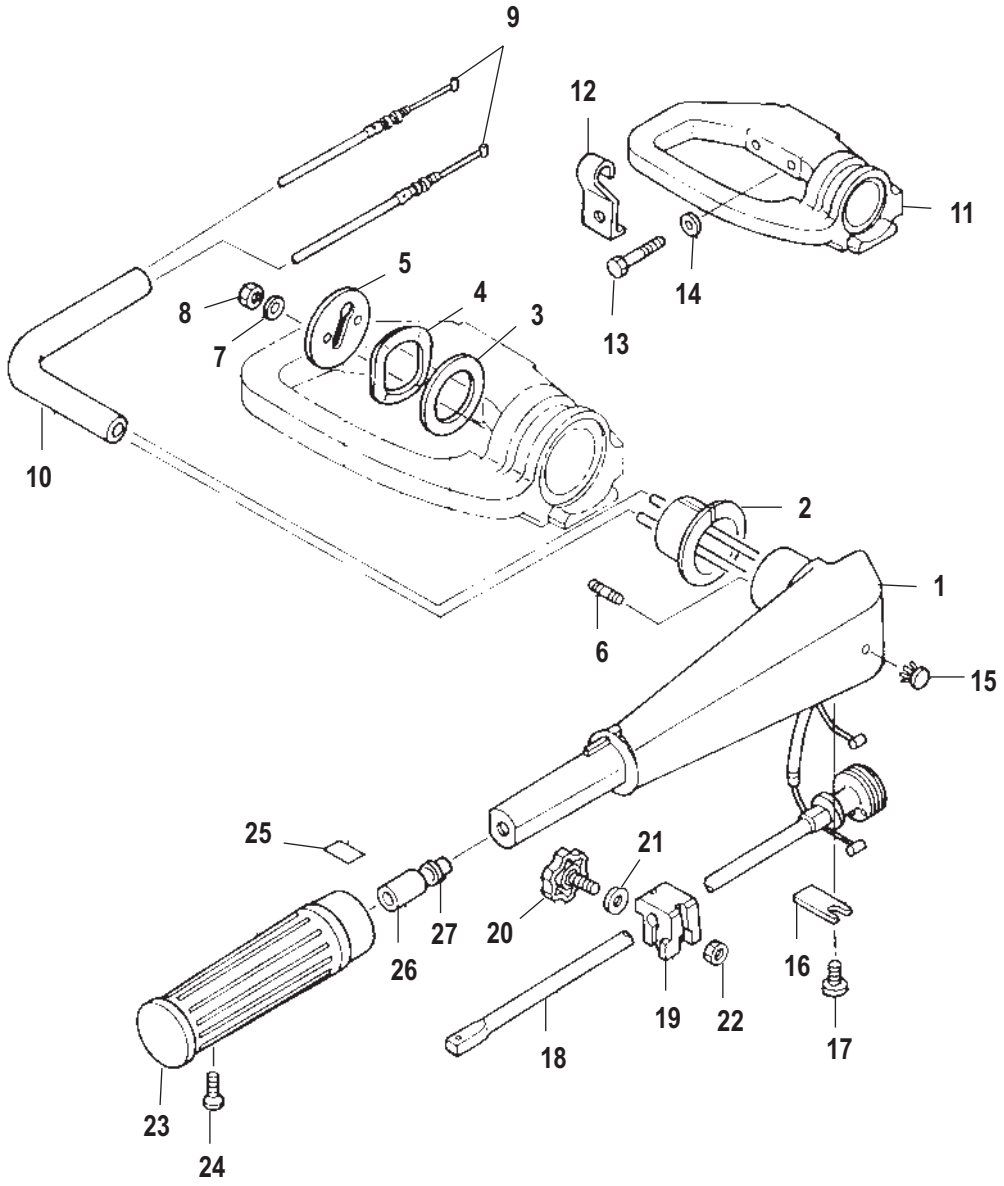

Cat.# 90-895257005

Tiller Handle

Ref #	Part Class	Part Number	Description	Comments	Qty	Note
1	0000	803996002	Handle Steering		1	
2	0023	823939001	BUSHING		1	
3	0012	822145001	WASHER		1	
4	0013	826792001	WAVE WASHER		1	
5	0000	826648001	PLATE Handle		1	
6	0016	815028	STUD BOLT		2	
7	0012	895106	WASHER Stainless Steel		2	
8	0011	853722022	NUT		2	
9	0000	895131A04	CABLE ASSEMBLY Throttle		2	
10	0032	895108004	SLEEVE Protective		1	
11	0000	804019002	BRACKET Steering		1	
12	0054	851863001	CLAMP		1	
13	0010	895140003	BOLT		2	
14	0012	895141	WASHER Stainless Steel		2	
15	0017	16085	PIN		1	
16	0000	16338	BRACKET		1	
17	0010	16827	SCREW		1	
18	0000	803998002	SHAFT Throttle		1	
19	0000	813026	FRICTION PIECE		1	
20	0010	16087	SCREW Adjusting		1	
21	0012	895106	WASHER Stainless Steel		1	
22	0011	853722022	NUT		1	
23	0000	853775003	GRIP		1	
24	0010	803876002	SCREW		1	
25	0037	824200005	DECAL Throttle		1	
26	0023	16191	SPACER		1	
27	0023	16336	BUSHING		1	

Clamp Brackets

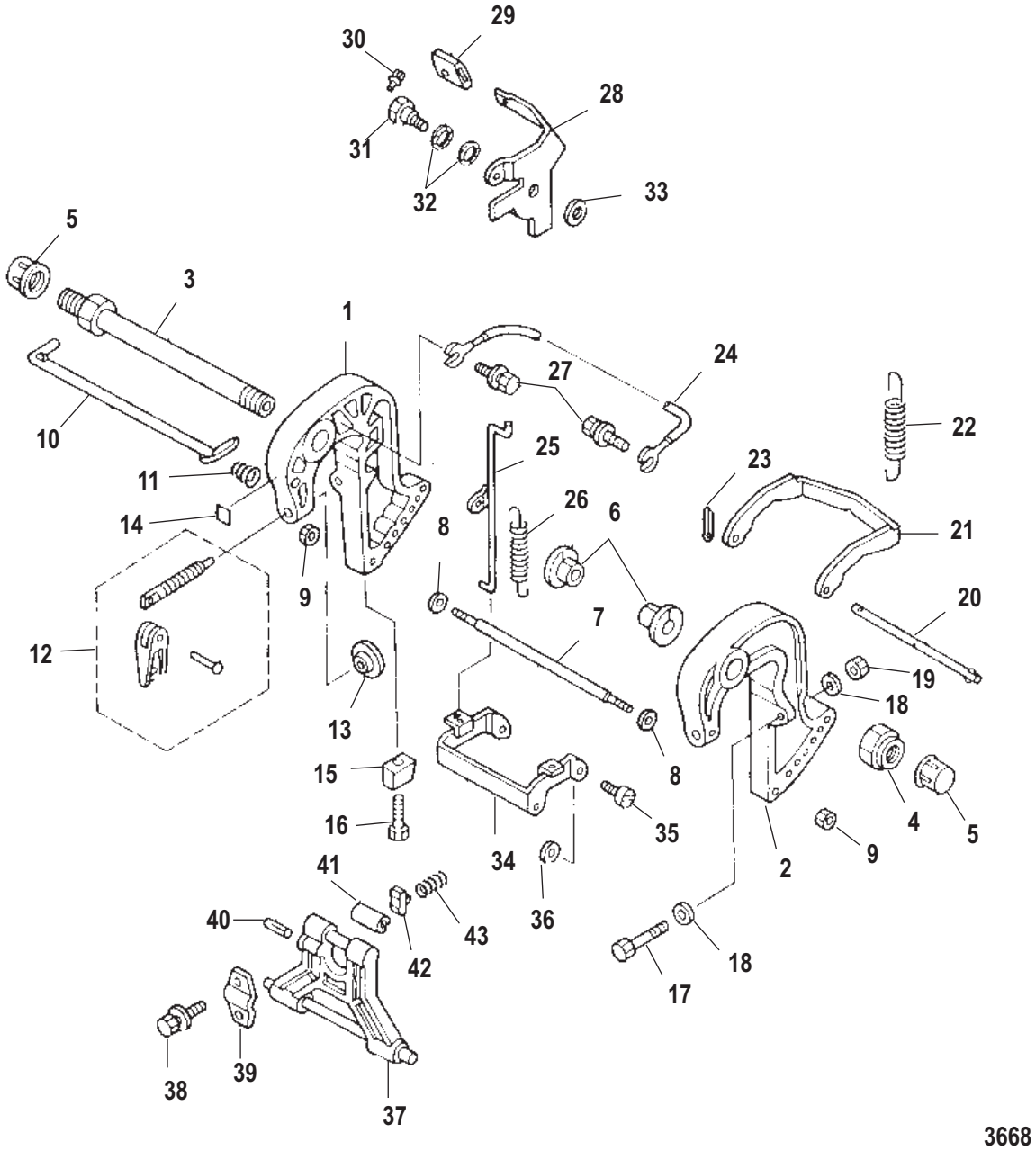

Cat.# 90-895257005

Clamp Brackets

Ref #	Part Class	Part Number	Description	Comments	Qty	Note
1	3406	96222	CLAMP BRACKET Starboard, Black, 1/2 Inch Thread	[0N074966] & Below	1	
1	3418	898101T26	CLAMP BRACKET Starboard, 14MM Thread	[0N074967] & Up	1	
2	3406	96232	CLAMP BRACKET Port, Black, 1/2 Inch Thread	[0N074966] & Below	1	
2	3418	898101T25	CLAMP BRACKET Port, 14MM Thread	[0N074967] & Up	1	
3	0010	851866008	BOLT		1	
4	0011	85372213	NUT		1	
5	0011	85372214	CAP NUT		1	
6	0023	8537435	BUSHING		2	
7	0000	853796	PIN Spacer		1	
8	0012	895106	WASHER Stainless Steel		2	
9	0011	853722022	NUT		2	
10	0000	161981	PIN Tilt		1	
11	0024	8126455	SPRING		1	
12	0010	16200A1	THUMB SCREW ASSEMBLY 1/2 Inch Thread Size	[0N074966] & Below	2	
12	0010	804042A02	THUMB SCREW ASSEMBLY 14 MM Thread Size	[0N074967] & Up	2	
13	0012	95379	PAD		2	
14	0037	823701003	DECAL Co-Pilot		1	
15	0097	804043	ANODE		1	
16	0010	82304224	BOLT		1	
17	0010	161263	BOLT		2	
18	0012	895106001	WASHER		4	
19	0011	853722023	NUT		2	
20	0000	8537474	ROD Reverse Lock		1	
21	0000	162131	ARM Reverse Lock		1	
22	0024	953834	SPRING	(Short)	1	
22	0024	953835	SPRING	(Long)	1	
23	0018	8150261	COTTER PIN		1	
24	0084	8537401	GROUND WIRE To Swivel Bracket		1	
25	0000	8537475	LINK Reverse Lock		1	
26	0024	953833	SPRING		1	
27	0010	82304234	BOLT		2	
28	0000	8537591	LEVER Reverse Lock		1	
29	0000	853775	GRIP		1	
30	0000	853776	BUTTON		1	
31	0010	162612	BOLT		1	
32	0013	17641	WAVE WASHER		2	
33	0012	953921	WASHER Stainless Steel		1	
34	0000	162132	ARM Reverse Lock		1	
35	0010	853700	SCREW		2	
36	0012	953921	WASHER Stainless Steel		2	
37	0000	8251121	STOPPER Tilt		1	

Clamp Brackets

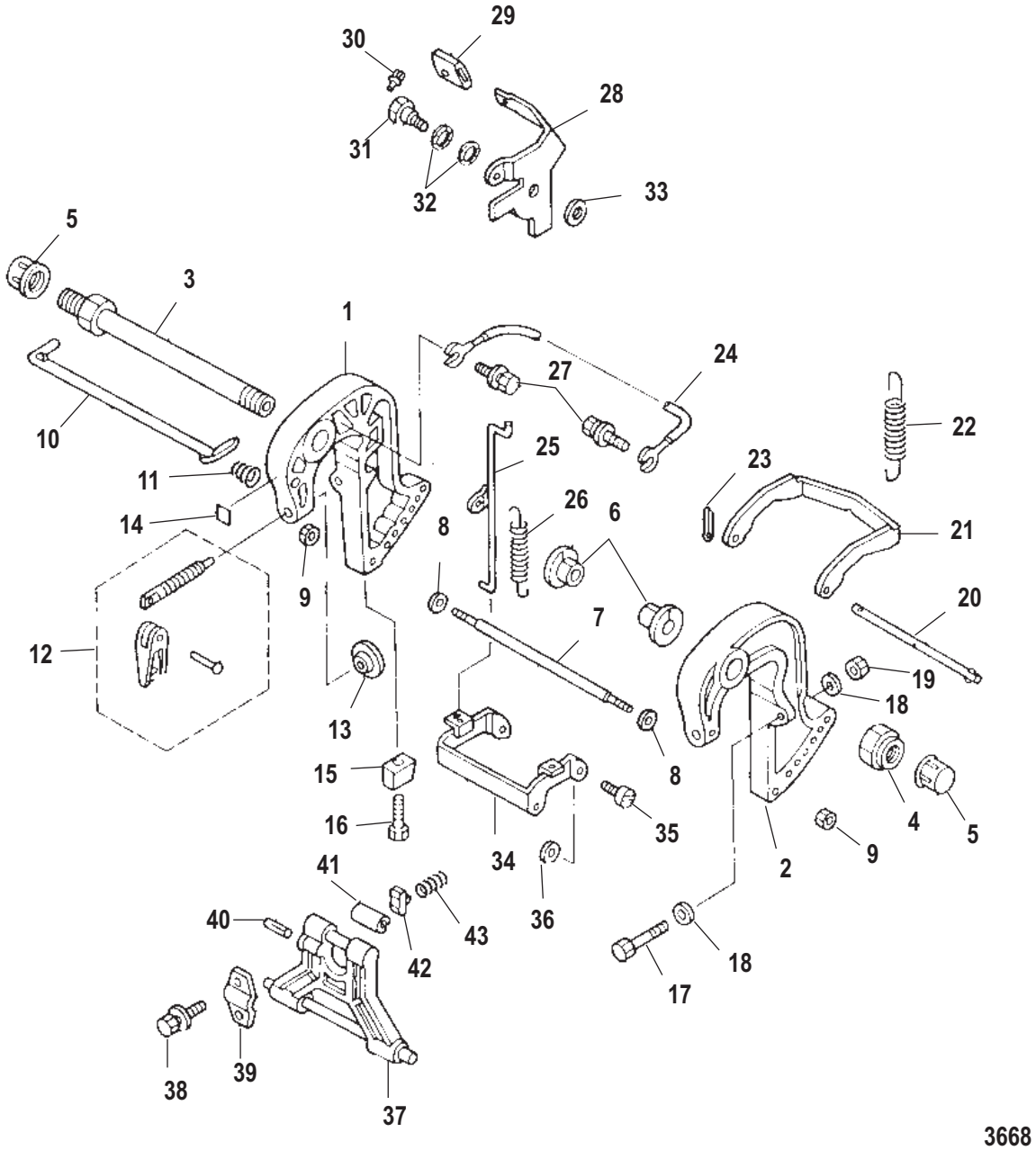

Cat.# 90-895257005

Clamp Brackets

Ref #	Part Class	Part Number	Description	Comments	Qty	Note
38	0010	823042052	BOLT		2	
39	0000	162101	SET PLATE		1	
40	0017	95218016	PIN Spring		1	
41	0000	8251131	BRACKET		1	
42	0000	853774	STOP		1	
43	0024	953832	SPRING		1	

Swivel Bracket

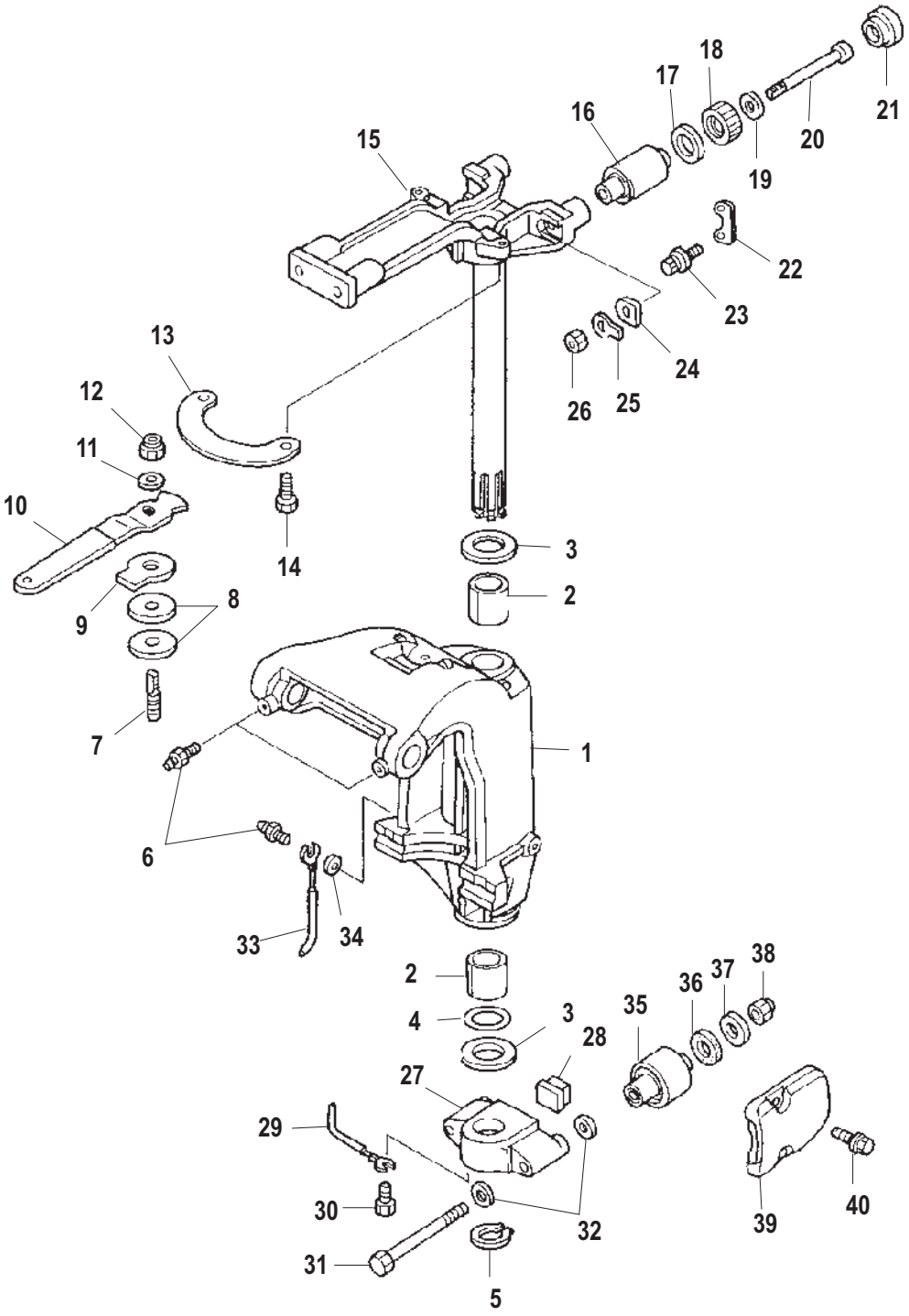

Cat.# 90-895257005

Swivel Bracket

Ref #	Part Class	Part Number	Description	Comments	Qty	Note
1	3407	813029015	SWIVEL BRACKET		1	
2	0023	16336007	BUSHING		2	
3	0000	803774002	PLATE Thrust		2	
4	0025	16109002	O-RING		1	
5	0053	804027001	C-RING		1	
6	0022	824969	FITTING Grease		3	
7	0010	895140002	BOLT		1	
8	0000	895173	DISC		2	
9	0012	895146003	WASHER		1	
10	0000	895171001	HANDLE Co-Pilot		1	
11	0012	895146001	WASHER		1	
12	0011	95374001	NUT Nylon		1	
13	0000	895172001	PLATE Co-Pilot		1	
14	0010	804368	BOLT Stainless Steel		2	
15	0000	853770003	TUBE Swivel		1	
16	0000	853771005	MOUNT Upper		2	
17	0000	853772003	PLATE Upper Lock		2	
18	0000	853773004	DAMPER Upper		2	
19	0012	895168001	WASHER		2	
20	0010	812935007	BOLT		2	
21	0000	853773003	DAMPER Upper		2	
22	0000	853755003	MOUNT Retainer		2	
23	0010	823042040	BOLT Stainless Steel		2	
24	0012	162382	WASHER		2	
25	0000	853772002	PLATE Lock		2	
26	0011	85372215	NUT		2	
27	0000	853786004	YOKE Bottom		1	
28	0000	8537732	RUBBER DAMPER		1	
29	0084	878357	CABLE ASSEMBLY Ground To Rubber Cop		1	
30	0010	82304234	BOLT		1	
31	0010	851866009	BOLT		2	
32	0012	95392014	WASHER		4	
33	0084	8537405	GROUND WIRE To Lower Mount		1	
34	0012	16826	WASHER Stainless Steel		1	
35	0000	8537712	MOUNT		2	
36	0012	851867	WASHER		2	
37	0012	953928	WASHER		2	
38	0011	95374002	NUT		2	
39	0000	851869002	COVER		2	
40	0010	82304233	BOLT		4	

Driveshaft Housing

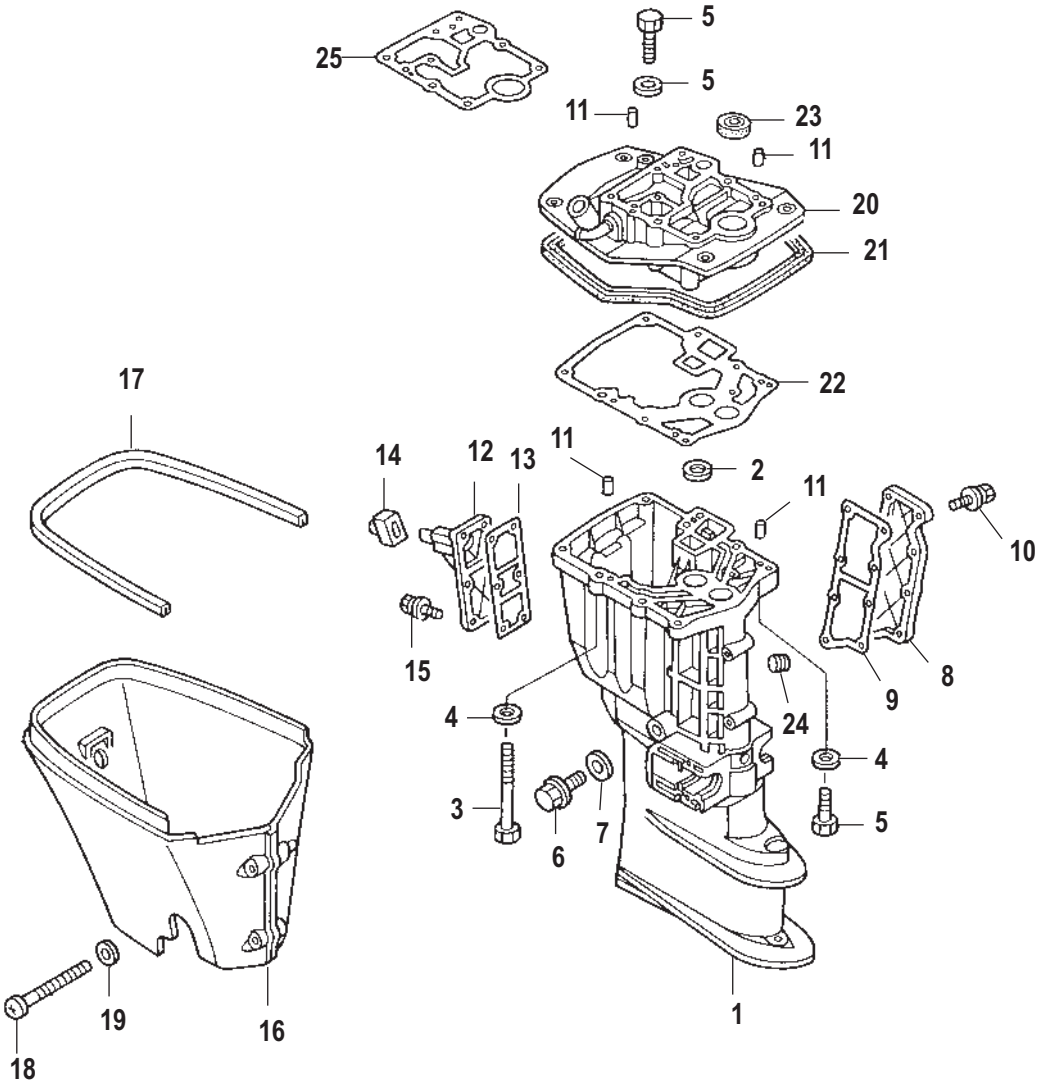

Cat.# 90-895257005

Driveshaft Housing

Ref #	Part Class	Part Number	Description	Comments	Qty	Note
1	1599	803724002	HOUSING Driveshaft	(Short)	1	
1	1599	803725002	HOUSING Driveshaft	(Long)	1	
2	0000	95275002	PLATE		1	
3	0010	823042047	BOLT		6	
4	0012	895106001	WASHER		9	
5	0010	823042048	BOLT		3	
6	0010	895136002	BOLT Drain		1	
7	0012	895146	WASHER		1	
8	0000	853577001	COVER Drain		1	
9	0027	854617001	GASKET		1	
10	0010	16830010	BOLT		8	
11	0017	16119	PIN Dowel		4	
12	0000	895147001	COVER Idle Port		1	
13	0027	895148001	GASKET		1	
14	0025	881305005	GROMMET		1	
15	0010	82304233	BOLT		6	
16	0000	895149001	APRON		1	
17	0000	852432002	SEAL Rubber		1	
18	0010	16257004	SCREW Tapping		2	
19	0012	895106	WASHER Stainless Steel		2	
20	0000	851852002	ADAPTER PLATE With Nipple		1	
21	0000	852432001	SEAL Rubber		1	
22	0027	803663015	GASKET		1	[1]
23	0026	8537072	SEAL Oil		1	[1]
24	0019	803593	PLUG		1	
25	0027	835427004	GASKET		1	
-	0027	835427A05	GASKET SET Powerhead		1	

PART NOTES:

[1] - COMPONENT OF ENGINE/POWERHEAD GASKET SET 835427A05

Gear Housing Driveshaft

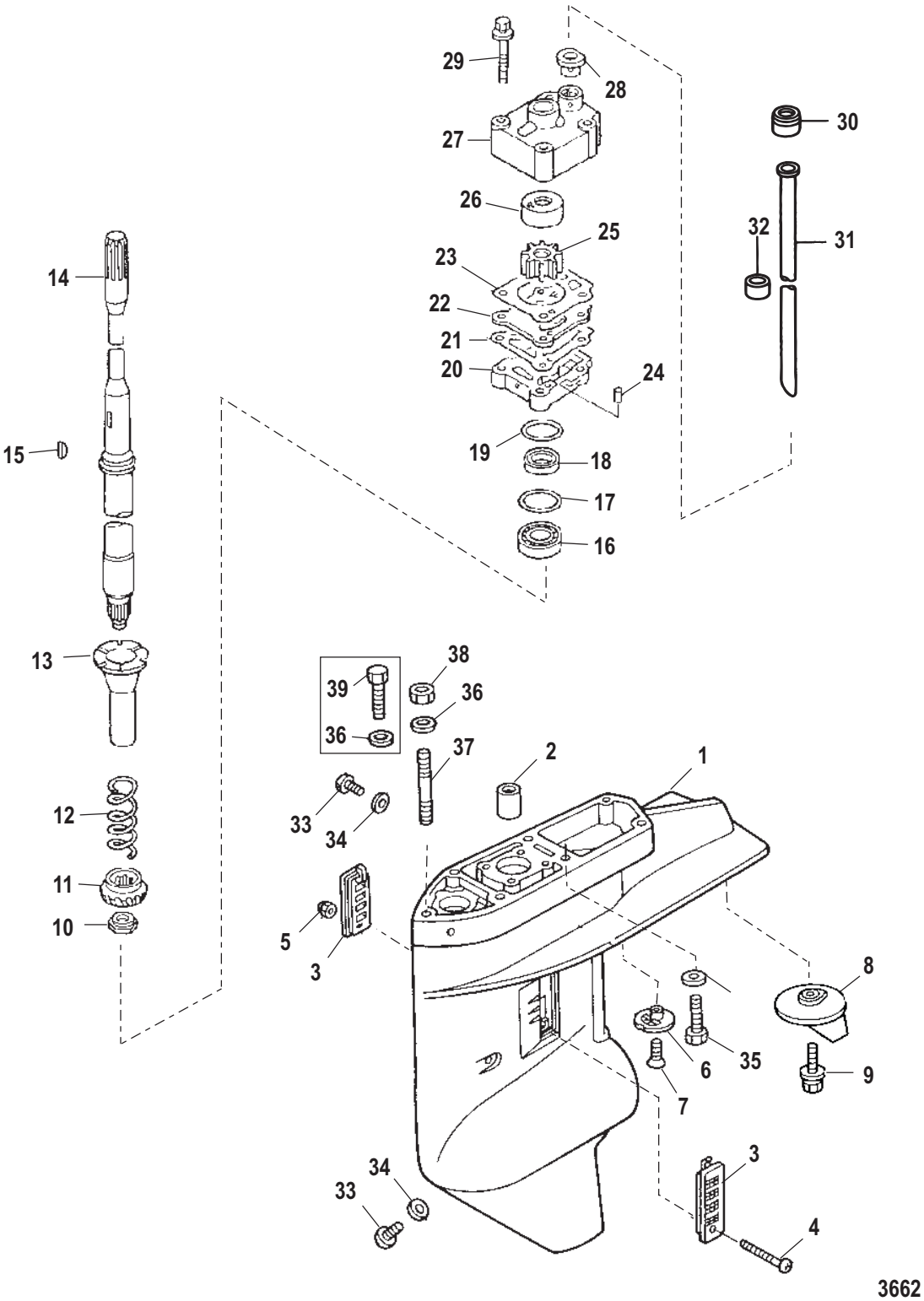

Cat.# 90-895257005

Gear Housing Driveshaft

Ref #	Part Class	Part Number	Description	Comments	Qty	Note
-	1668	895154A04	GEAR HOUSING ASSEMBLY Complete	Short	1	
-	1668	895154A05	GEAR HOUSING ASSEMBLY Complete	Long	1	
1	1668	825132A4	GEAR HOUSING ASSEMBLY Basic		1	
2	0031	8130484	BEARING Needle		1	
3	0000	853763	STRAINER SET Water		1	
4	0010	17635	SCREW		1	
5	0011	85372216	NUT		1	
6	0000	16133	STRAINER Water		1	
7	0010	823042051	SCREW		1	
8	0000	853762	TRIM TAB		1	
9	0010	82304233	BOLT		1	
10	0011	85372211	NUT		1	
11	0043	16138T01	GEAR Pinion (12 Teeth)		1	
12	0024	8126454	SPRING		1	
13	0000	853765	PIPE		1	
14	0045	803738006	DRIVESHAFT	Short	1	
14	0045	161362	DRIVESHAFT	Long	1	
15	0028	161551	KEY		1	[1]
16	0030	161282	BEARING Tapered roller		1	
17	0015	813276001	SHIM (0.1)		AR	
17	0015	813276015	SHIM (0.15)		AR	
17	0015	813276003	SHIM (0.3)		AR	
17	0015	813276005	SHIM (0.5)		AR	
18	0026	161622	SEAL Oil		1	[2]
19	0025	8537096	O-RING		1	[2]
20	0046	803750006	HOUSING Water Pump - Lower		1	
21	0027	161602	GASKET		1	[3]
22	0000	803753002	PLATE Water Pump Guide		1	[1]
23	0027	16158010	GASKET		1	[4]
24	0017	952188	PIN Dowel		2	
25	0047	803748002	IMPELLER		1	[1]
26	0000	803751002	PUMP Liner Housing		1	[1]
27	0046	803750005	HOUSING Water Pump		1	
28	0026	161681	SEAL		1	
29	0010	823042046	BOLT		4	
30	0025	804903001	GROMMET		1	
31	0032	803755006	TUBE Water	Short	1	
31	0032	803755007	TUBE Water	Long	1	
32	0032	851848008	HOSE Rubber (15 mm)	Long	1	
33	0022	953683	PLUG		2	
34	0027	95220	GASKET		2	[2]
35	0010	16695006	BOLT		4	
36	0012	895106001	WASHER		5	
37	0010	823042049	BOLT Stud	Short	1	

Gear Housing Driveshaft

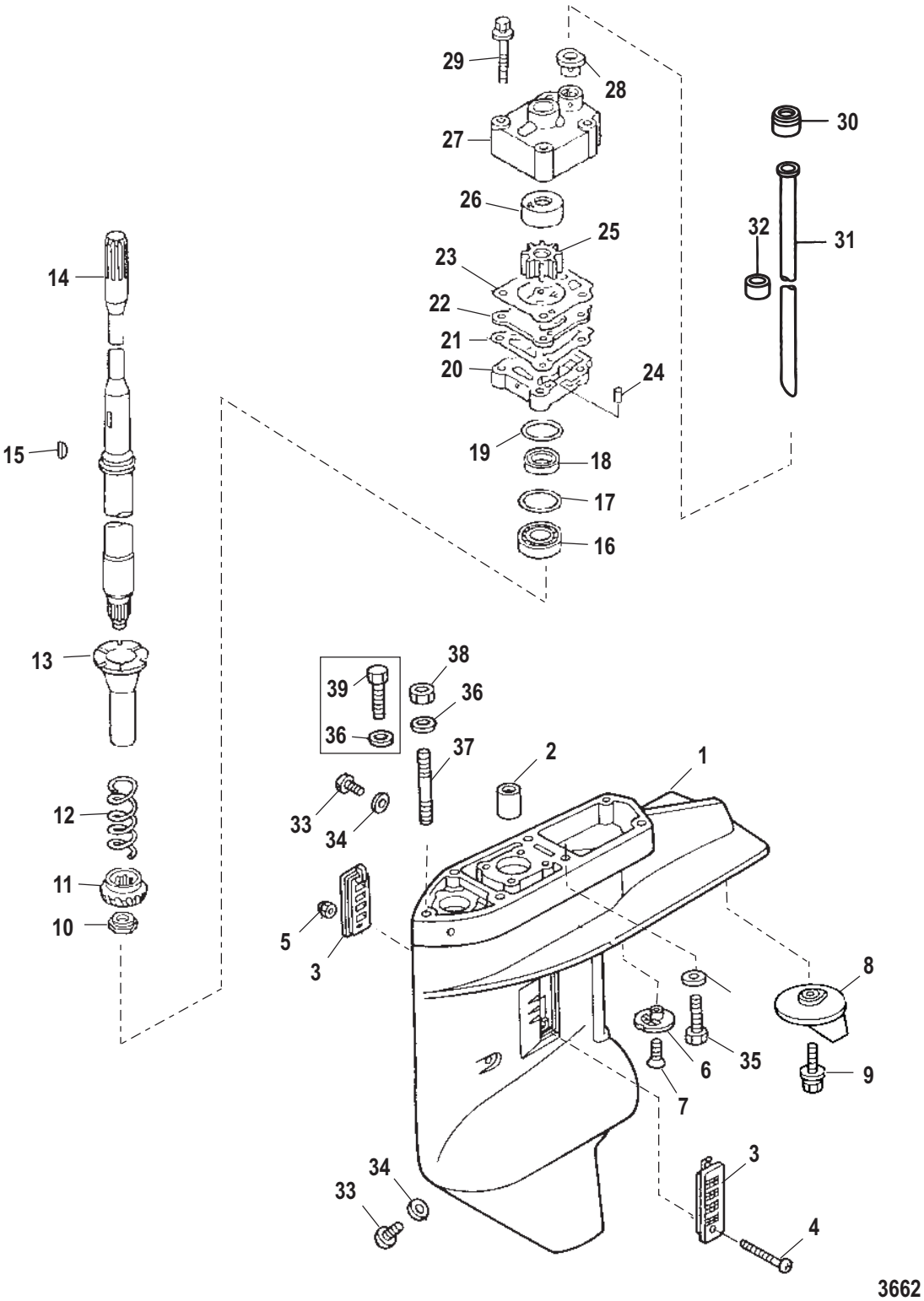

Cat.# 90-895257005

Gear Housing Driveshaft

Ref #	Part Class	Part Number	Description	Comments	Qty	Note
38	0011	853722023	NUT		1	
39	0010	803726001	BOLT	Long and X-Long	1	
-	0000	853792A07	REPAIR KIT Water Pump		1	
-	0027	804908A01	GASKET SET Gearcase		1	

PART NOTES:

[1] - COMPONENT OF WATER PUMP REPAIR KIT853792A07

[2] - COMPONENT OF LOWER UNIT GASKET SET804908A01

[3] - COMPONENT OF WATER PUMP REPAIR KIT853792A07
COMPONENT OF LOWER UNIT GASKET SET804908A01

[4] - COMPONENT OF LOWER UNIT GASKET SET804908A01
COMPONENT OF WATER PUMP REPAIR KIT853792A07

Gear Housing Propeller Shaft

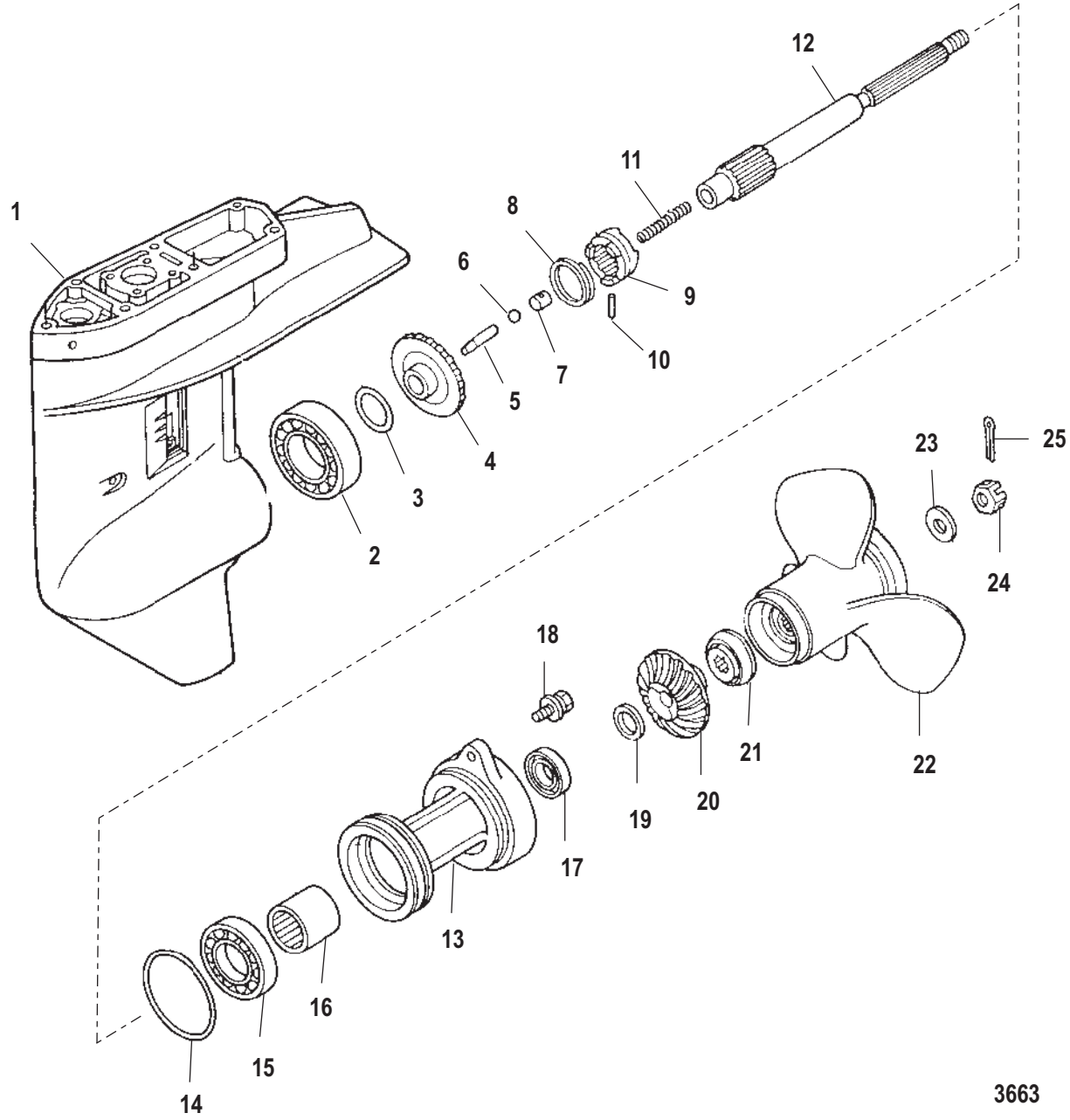

Cat.# 90-895257005

Gear Housing Propeller Shaft

Ref #	Part Class	Part Number	Description	Comments	Qty	Note
-	1668	895154A04	GEAR HOUSING ASSEMBLY Complete Short		1	
-	1668	895154A05	GEAR HOUSING ASSEMBLY Complete Long		1	
1	1668	825132A4	GEAR HOUSING ASSEMBLY Basic		1	
2	0030	161281	BEARING Ball		1	
3	0015	8132761	SHIM (0.15)	(0.15)	AR	
3	0015	161631	SHIM (0.1)	(0.1)	AR	
4	0043	8129441	GEAR Forward		1	
5	0000	161521	FOLLOWER Cam		1	
6	0030	161322	BALL Steel		1	
7	0000	853764	HOLDER		1	
8	0024	8126453	SPRING		1	
9	0052	8129461	CLUTCH		1	
10	0017	161501	PIN		1	
11	0024	176672	SPRING		1	
12	0044	195131	PROPELLER SHAFT		1	
13	0000	825119A1	CARRIER ASSEMBLY Bearing		1	
14	0025	161311	O-RING		1	[1]
15	0030	161321	BEARING Ball		1	
16	0031	8130485	BEARING Needle		1	
17	0026	161301	SEAL Oil	[0R515208] & Below	1	[1]
17	0026	8M0079092	SEAL Oil	[0R515209] & Up	1	[2]
18	0010	823042050	BOLT		2	
19	0012	161401	WASHER		1	
20	0043	8129452	GEAR Reverse		1	
21	0000	161452	THRUST HUB		1	
22	0048	8537905	PROPELLER	(8)	OPT	
22	0048	853790007	PROPELLER	(9)	OPT	
22	0048	8537903	PROPELLER	(10)	OPT	
22	0048	8537902	PROPELLER	(11)(Standard Long)	1	
22	0048	853790008	PROPELLER	(12)	OPT	
22	0048	8537901	PROPELLER	(13)(Standard Short)	1	
22	0048	853790	PROPELLER	(14)	OPT	
23	0012	161402	WASHER		1	
24	0011	161471	PROP NUT		1	
25	0018	8150264	COTTER PIN		1	
-	0027	804908A01	GASKET SET Gearcase	[0R515208] & Below	1	

PART NOTES:

[1] - COMPONENT OF LOWER UNIT GASKET SET804908A01

[2] - COMPONENT OF LOWER UNIT GASKET SET

Fuel Tank Assembly (6.6 Gallon)

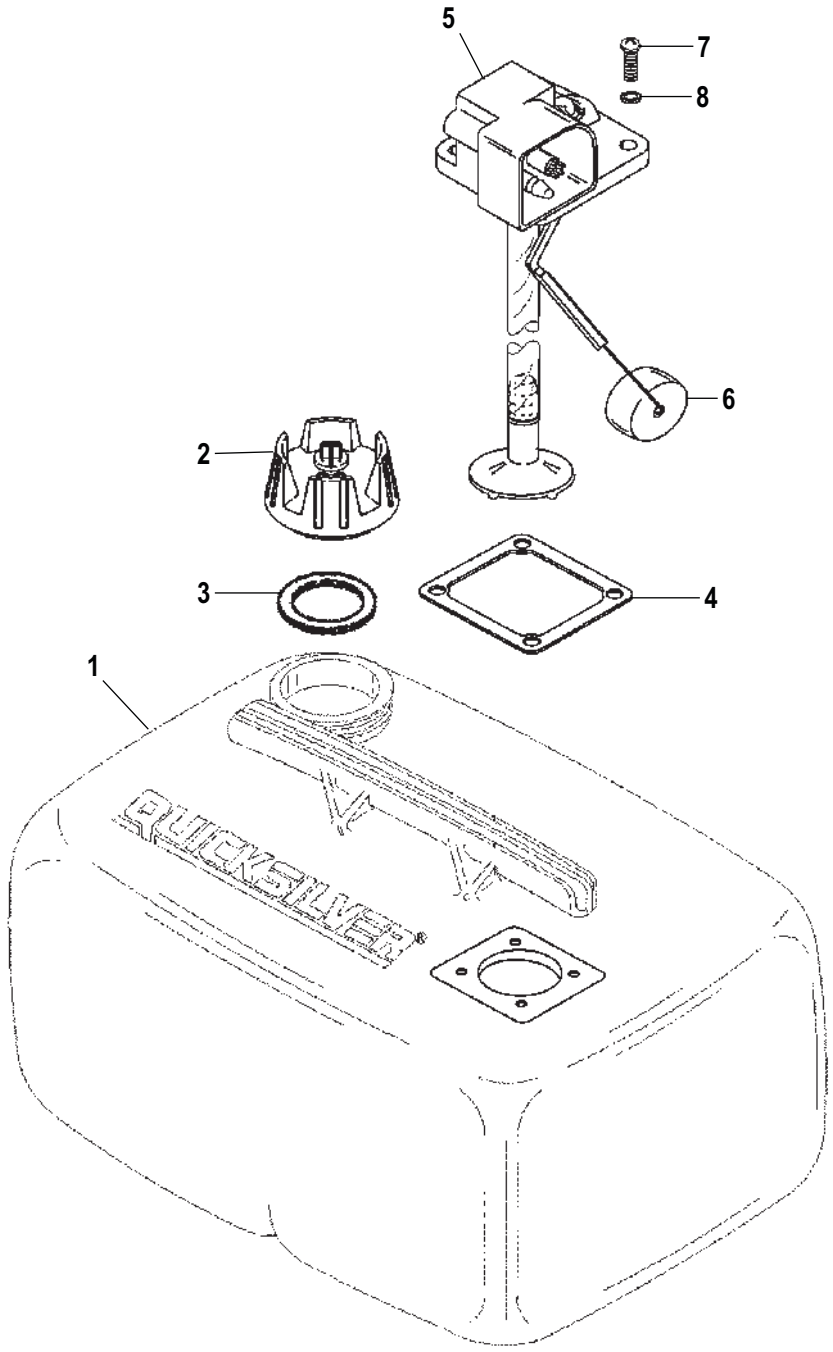

5741

Cat.# 90-895257005

Fuel Tank Assembly (6.6 Gallon)

Ref #	Part Class	Part Number	Description	Comments	Qty	Note
1	1265	859065A3	TANK ASSEMBLY Fuel Fuel		1	
2	0036	816976Q1	CAP ASSEMBLY Fuel-Manual Vent Fuel		1	[1]
3	0027	8169771	GASKET Fuel Cap Fuel Cap		1	
4	0027	859072	GASKET Pick Up Body		1	
5	0000	859066A3	PICK UP ASSEMBLY Fuel		1	
6	0000	859056	FLOAT		1	
7	0010	40056107	SCREW (M5 x 16)		4	
8	0012	859080	WASHER Fiber		4	

PART NOTES:

[1] - Alternate part numbers:

816976A 1Service Part

816976Q 1QS

816976T 1MPP

Cat.# 90-895257005

Accessories

Ref #	Part Class	Part Number	Description	Comments	Qty	Note
-	0050	853805A06	STARTER MOTOR KIT Electric		1	

Cat.# 90-895257005

Maintenance Kits

Ref #	Part Class	Part Number	Description	Comments	Qty	Note
-	0000	8M0120839	SERVICE KIT F25/30 Hp Standard (300 Hour)		1	
-	0035	8M0162831	FILTER ASSY OIL 4 STROKE		1	
-	0035	8M0088825	FUEL FILTER KIT		1	
-	0011	95374	NUT Nylon		1	
-	0026	8M0007119	SEAL Drain Plug		1	
-	0000	8M0075255	SEAL Drain Plug		2	
-	0000	8M0119207	THERMOSTAT 60 Degrees		1	
-	0027	853702005	GASKET		1	
-	0033	803507	SPARK PLUG		3	
-	0000	853792A07	REPAIR KIT Water Pump		1	
-	0097	823912	ANODE		1	
-	0097	823912002	ANODE		1	
-	0097	804043	ANODE		1	

Part No.	Description	Pg.	Ref.no	Part No.	Description	Pg.	Ref.no
15781A5	CONNECTOR Fuel - Brass	4	18	160531	KEY	26	13
160573	E RING	26	11	16058003	STATOR	6	4
16085	PIN	28	15	16087	SCREW Adjusting	28	20
16109002	O-RING	34	4	16119	PIN Dowel	14	5
16119	PIN Dowel	22	2	16119	PIN Dowel	22	7
16119	PIN Dowel	24	3	16119	PIN Dowel	36	11
161263	BOLT	30	17	161281	BEARING Ball	42	2
161282	BEARING Tapered roller	38	16	161301	SEAL Oil	42	17
161311	O-RING	42	14	161313	O-RING	14	22
161321	BEARING Ball	42	15	161322	BALL Steel	42	6
16133	STRAINER Water	38	6	161362	DRIVESHAFT	38	14
16138T01	GEAR Pinion (12 Teeth)	38	11	161401	WASHER	42	19
161402	WASHER	42	23	161404	WASHER	4	11
161452	THRUST HUB	42	21	161471	PROP NUT	42	24
161501	PIN	42	10	161521	FOLLOWER Cam	42	5
161551	KEY	38	15	16158010	GASKET	38	23
161602	GASKET	38	21	161622	SEAL Oil	38	18
161631	SHIM (0.1)	42	3	161681	SEAL	38	28
161722	CAM	12	1	16176007	BUSHING	12	4
161772	O-RING	12	5	161782	O-RING	12	6
16179	PIN	12	3	16191	SPACER	28	26
16196001	SCREW	16	12	161981	PIN Tilt	30	10
16200A1	THUMB SCREW ASSEMBLY 1/2 Inch Thread Size	30	12	162101	SET PLATE	32	39
162131	ARM Reverse Lock	30	21	162132	ARM Reverse Lock	30	34
16218009	TILT HANDLE	4	2	16219	SEAL	4	30
16219	SEAL	12	15	16221	WAVE WASHER	4	33
16222003	HOOK Cover	4	32	16223	BOLT (M6 x 14)	22	27
162231	BOLT	6	9	162231	BOLT	6	37
16226	GROMMET	4	14	162312	GROMMET	4	21
162382	WASHER	34	24	16248	FILTER Fuel	14	25
16252	CAP	16	18	16253004	FLOAT	16	10
16255	CLIP	16	21	16256004	FLOAT Arm Pin	16	11
16257004	SCREW Tapping	36	18	162601	SCREW	16	7
162612	BOLT	30	31	16263	SCREW	16	30
16264002	SPRING	16	31	16327001	GASKET Carburetor	14	8
16336	BUSHING	28	27	16336007	BUSHING	34	2
163365	BUSHING	4	31	16338	BRACKET	28	16
16695006	BOLT	38	35	16705	BOLT	18	10
16823	GROMMET	12	13	16826	WASHER Stainless Steel	34	34
16827	SCREW	28	17	16828	BOLT	24	13
16830009	BOLT	22	9	16830010	BOLT	36	10
16830A1	SCREW KIT	24	17	17174	BOLT	6	35
17635	SCREW	38	4	17641	WAVE WASHER	30	32
176672	SPRING	42	11	195131	PROPELLER SHAFT	42	12
4000330	SCREW (M6 x 25)	10	30	40056107	SCREW (M5 x 16)	44	7
73318002	TEE Fitting	16	39	802690005	FLOAT	16	2
802690006	FLOAT	16	2	802690007	FLOAT	16	2
802699003	GASKET Float Bowl	16	3	802700005	NOZZLE Main	16	15
802701006	JET Main #82	16	16	802987001	DECAL F, N, R	4	27
802996001	BUZZER Overheat	6	38	803507	SPARK PLUG (NGK#DCPR6E)	24	11
803507	SPARK PLUG	48	-	803508018	GASKET	24	21
803509015	SCREW Drain	16	8	803509016	SCREW Drain	16	32
8035092	BOLT	26	10	803512002	DIPSTICK	22	21
803513007	O-RING	24	19	803518	RING Piston - Top	26	6
8035181	RING Piston - Top	26	6	803518A03	RING SET Piston	26	-
803518A04	RING SET Piston	26	-	803519	RING Piston - Second	26	7
8035191	RING Piston - Second	26	7	803520	RING Oil	26	8
8035201	RING Oil	26	8	803521	PIN Piston	26	12
803525001	CLIP	24	15	803529A04	PUMP Fuel	14	20
803535002	PLUNGER	22	25	803538	SWITCH ASSEMBLY Oil Pressure	6	43
803539001	WIRE Lead	6	44	8035544	SPRING	20	5

PARTS INDEX

Part No.	Description	Pg.	Ref.no	Part No.	Description	Pg.	Ref.no
803555	RETAINER	20	7	803556	KEEPER Valve	20	8
803559A03	COIL ASSEMBLY Ignition	6	19	803560002	CAP Plug	6	20
8035631	CLAMP	4	15	8035631	CLAMP	6	21
803577002	FLYWHEEL	6	1	803580A12	TOP COWL ASSEMBLY	4	1
803593	PLUG	36	24	803598	SEAT	20	6
803663015	GASKET	36	22	803689004	JET Slow #45	16	17
803716005	HOUSING Starter	10	2	803716A05	STARTER ASSEMBLY Recoil	10	1
803717002	REEL	10	10	803718002	RATCHET GUIDE	10	15
803724002	HOUSING Driveshaft	36	1	803725002	HOUSING Driveshaft	36	1
803726001	BOLT	40	39	803738006	DRIVESHAFT	38	14
803748002	IMPELLER	38	25	803750005	HOUSING Water Pump	38	27
803750006	HOUSING Water Pump - Lower	38	20	803751002	PUMP Liner Housing	38	26
803753002	PLATE Water Pump Guide	38	22	803755006	TUBE Water	38	31
803755007	TUBE Water	38	31	803760006	ROD Cam	12	2
803760007	ROD Cam	12	2	803762	CLAMP	6	34
803763003	LEVER Shift	12	14	803766004	ROD Shift	12	10
803767003	ROD Joint Shift	12	11	803768004	LEVER Rod Shift	12	18
803774002	PLATE Thrust	34	3	803876001	BOLT	18	15
803876002	SCREW	28	24	803996002	Handle Steering	28	1
803998002	SHAFT Throttle	28	18	804019002	BRACKET Steering	28	11
804024008	SPRING Starter	10	8	804027001	C-RING	34	5
804029	HANDLE Starter	10	3	804031002	LOCK Starter	10	6
804035001	PULLEY Starter	10	17	804042A02	THUMB SCREW ASSEMBLY 14 MM Thread Size	30	12
804043	ANODE	30	15	804043	ANODE	48	-
804057001	PILOT LAMP	6	42	804368	BOLT Stainless Steel	10	18
804368	BOLT Stainless Steel	34	14	804887001	MANIFOLD Inlet	14	1
804903001	GROMMET	38	30	804908A01	GASKET SET Gearcase	12	-
804908A01	GASKET SET Gearcase	40	-	804908A01	GASKET SET Gearcase	42	-
809570003	VALVE Float	16	19	812634004	SPRING Return	10	16
812635003	RATCHET	10	14	812637002	BOLT	10	13
812638002	PLATE Friction	10	12	812645008	SPRING	10	5
812645009	SPRING	10	24	8126453	SPRING	42	8
8126454	SPRING	38	12	8126455	SPRING	30	11
812935007	BOLT	34	20	812940006	PIPE Oil (330 mm) To Air Silencer	24	14
812940007	HOSE Rubber (290 mm) To Engine Base	24	24	8129441	GEAR Forward	42	4
8129452	GEAR Reverse	42	20	8129461	CLUTCH	42	9
812960004	CONNECTOR	16	35	8129603	NIPPLE	24	10
813026	FRICTION PIECE	28	19	813029015	SWIVEL BRACKET	34	1
8130484	BEARING Needle	38	2	8130485	BEARING Needle	42	16
813276001	SHIM (0.1)	38	17	813276003	SHIM (0.3)	38	17
813276005	SHIM (0.5)	38	17	813276015	SHIM (0.15)	38	17
8132761	SHIM (0.15)	42	3	815013A07	CYLINDER BLOCK	22	1
8150261	COTTER PIN	30	23	8150262	COTTER PIN	12	21
8150264	COTTER PIN	42	25	815028	STUD BOLT	28	6
815093002	SPRING Tensioner	18	17	816311T	TIE STRAP (8.00 Inches)	16	36
816311T	TIE STRAP (8.00 Inches)	22	23	816976Q1	CAP ASSEMBLY Fuel-Manual Vent Fuel	44	2
8169771	GASKET Fuel Cap Fuel Cap	44	3	817015003	LATCH Cowl	4	29
822145001	WASHER	28	3	822626Q03	FILTER ASSEMBLY Oil	22	19
822647001	SEAL Intake - Black	20	3	822647002	SEAL Exhaust - Green	20	4
823031016	SCREW	24	23	823032001	LOCKWASHER	18	20
823037A2	SWITCH ASSEMBLY Stop - Lanyard	6	28	823042036	BOLT	20	14
823042037	BOLT	22	14	823042040	BOLT Stainless Steel	10	20
823042040	BOLT Stainless Steel	10	27	823042040	BOLT Stainless Steel	34	23
823042044	BOLT	4	10	823042046	BOLT	14	6
823042046	BOLT	38	29	823042047	BOLT	36	3
823042048	BOLT	36	5	823042049	BOLT Stud	38	37
823042050	BOLT	42	18	823042051	SCREW	38	7
823042052	BOLT	32	38	823042053	BOLT	4	23
82304222	BOLT Stainless Steel	4	19	82304224	BOLT	6	7
82304224	BOLT	22	13	82304224	BOLT	30	16
82304230	BOLT	4	26	82304233	BOLT	6	15

PARTS INDEX

Part No.	Description	Pg.	Ref.no	Part No.	Description	Pg.	Ref.no
82304233	BOLT	14	18	82304233	BOLT	22	18
82304233	BOLT	34	40	82304233	BOLT	36	15
82304233	BOLT	38	9	82304234	BOLT	4	34
82304234	BOLT	12	7	82304234	BOLT	30	27
82304234	BOLT	34	30	823054	LANYARD	6	29
823701003	DECAL Co-Pilot	30	14	823912	ANODE	22	15
823912	ANODE	48	-	823912002	ANODE	48	-
823939001	BUSHING	28	2	824200005	DECAL Throttle	28	25
824372A04	CABLE ASSEMBLY Red	6	40	824969	FITTING Grease	34	6
824995004	SEAL Rubber	10	19	825046001	SCREW Adjusting	20	10
825057005	O-RING	14	13	8251121	STOPPER Tilt	30	37
8251131	BRACKET	32	41	825119A1	CARRIER ASSEMBLY Bearing	42	13
825132A4	GEAR HOUSING ASSEMBLY Basic	38	1	825132A4	GEAR HOUSING ASSEMBLY Basic	42	1
825451001	COLLAR	20	15	825452002	SPRING	20	16
825453001	SPRING	20	17	825455001	SEAL Oil	18	7
825666001	KEY	26	14	825702002	BOLT Stainless Steel	6	23
825702002	BOLT Stainless Steel	14	21	826150001	NUT Adjusting	20	11
826648001	PLATE Handle	28	5	826792001	WAVE WASHER	28	4
834954002	COVER Cylinder Head	24	16	834955002	PULLEY Drive	18	22
834956002	CAMSHAFT	18	1	834957A02	CRANKSHAFT	26	1
834960009	BEARING	26	2	834960010	BEARING	26	2
834961003	ROD Connecting	26	9	834963002	PISTON	26	5
834963003	PISTON	26	5	834967004	PUMP Oil	18	3
834973002	PULLEY Driven	18	9	834974001	PLATE Breather	24	22
835395001	COIL Pulser	6	10	835395002	COIL Pulser	6	11
835395003	COIL Pulser	6	12	835401003	CD UNIT	6	14
835403004	PLATE CD Unit	6	22	835427004	GASKET	22	20
835427004	GASKET	36	25	835427A05	GASKET SET Powerhead	14	-
835427A05	GASKET SET Powerhead	18	-	835427A05	GASKET SET Powerhead	22	-
835427A05	GASKET SET Powerhead	24	-	835427A05	GASKET SET Powerhead	26	-
835427A05	GASKET SET Powerhead	36	-	835430A04	CYLINDER HEAD ASSEMBLY	24	1
850057003	ROPE Starter	10	7	850836002	GASKET	24	2
850838002	VALVE Intake	20	1	850839002	VALVE Exhaust	20	2
850841003	ARM Rocker	20	9	850842002	SHAFT Rocker	20	12
850842003	SHAFT Rocker	20	13	850879002	SCREW	18	5
851815005	GROMMET	6	26	851832	NUT	6	2
851845001	HOOK	18	18	851847A02	FILTER ASSEMBLY Oil	22	19
851848008	HOSE Rubber (15 mm)	38	32	851848009	TUBING (450 mm)	24	9
851848010	TUBING Rubber (160 mm)	14	24	851848011	TUBING (300 mm)	4	17
851852002	ADAPTER PLATE With Nipple	36	20	851862001	SHIFT ARM	12	16
851863	CLIP	12	17	851863001	CLAMP	28	12
851866008	BOLT	30	3	851866009	BOLT	34	31
851867	WASHER	34	36	851869002	COVER	34	39
852432001	SEAL Rubber	36	21	852432002	SEAL Rubber	36	17
852778010	SPRING Friction	10	11	852784001	E RING	10	9
853523002	GASKET	18	4	853525002	GASKET	14	4
853526002	INSULATOR	14	9	853526003	FLANGE Air Silencer	14	12
853531001	BOLT Cylinder Head	24	5	853531003	BOLT	22	4
853531004	BOLT	14	2	853536001	SCREW	6	5
853577001	COVER Drain	36	8	853700	SCREW	30	35
853702005	GASKET	22	11	853702005	GASKET	48	-
8537052	CAP Thermostat	22	12	8537072	SEAL Oil	36	23
8537096	O-RING	38	19	8537154	SPACER	4	12
853721	PIN Valve	16	20	853722022	NUT	4	7
853722022	NUT	28	8	853722022	NUT	28	22
853722022	NUT	30	9	853722023	NUT	30	19
853722023	NUT	40	38	85372211	NUT	38	10
85372213	NUT	30	4	85372214	CAP NUT	30	5
85372215	NUT	34	26	85372216	NUT	38	5
8537225	NUT	12	22	853728002	SILENCER Air	14	16
8537401	GROUND WIRE To Swivel Bracket	30	24	8537405	GROUND WIRE To Lower Mount	34	33

PARTS INDEX

Part No.	Description	Pg.	Ref.no	Part No.	Description	Pg.	Ref.no
8537435	BUSHING	30	6	8537437	MOUNT Rubber	4	13
853746003	ROD Link	16	14	8537474	ROD Reverse Lock	30	20
8537475	LINK Reverse Lock	30	25	853752002	BRACKET	22	26
853755002	CAP Starter Handle	10	4	853755003	MOUNT Retainer	34	22
853756001	PLATE	24	12	8537591	LEVER Reverse Lock	30	28
853761001	LEVER Link Components	16	44	853762	TRIM TAB	38	8
853763	STRAINER SET Water	38	3	853764	HOLDER	42	7
853765	PIPE	38	13	853770003	TUBE Swivel	34	15
853771005	MOUNT Upper	34	16	8537712	MOUNT	34	35
853772002	PLATE Lock	34	25	853772003	PLATE Upper Lock	34	17
853773003	DAMPER Upper	34	21	853773004	DAMPER Upper	34	18
8537732	RUBBER DAMPER	34	28	853774	STOP	32	42
853775	GRIP	30	29	853775003	GRIP	28	23
853776	BUTTON	30	30	853778007	BOTTOM COWL	4	9
853786004	YOKE Bottom	34	27	853788001	ROLLER	4	3
853790	PROPELLER	42	22	853790007	PROPELLER	42	22
853790008	PROPELLER	42	22	8537901	PROPELLER	42	22
8537902	PROPELLER	42	22	8537903	PROPELLER	42	22
8537905	PROPELLER	42	22	853792A07	REPAIR KIT Water Pump	40	-
853792A07	REPAIR KIT Water Pump	48	-	853794	RETAINER	12	9
853796	PIN Spacer	30	7	853798001	CLAMP	14	17
853805A06	STARTER MOTOR KIT Electric	46	-	853830002	PLUNGER	16	4
8539911	WASHER	6	3	853994	PLUG	6	17
853994001	PLUG	6	41	854254004	ENRICHENER	16	25
854255001	PLATE	16	26	854617001	GASKET	36	9
855540003	COVER Carburetor	16	22	855541004	GASKET	16	23
855542	SCREW	16	24	855542	SCREW	16	27
855544012	SCREW	6	39	855545002	COLLAR	10	25
855550001	EYE Lifting	22	8	855560001	SEAL Rubber	14	14
855567003	GASKET	16	9	855676002	THERMOSTAT 60 Degrees	22	10
855677002	BOLT	24	4	855677003	BOLT	22	3
855677004	BOLT	22	6	855679002	NUT	18	19
855681002	SEAL Oil Upper	26	3	855681003	SEAL Oil Lower	26	4
855809001	BOLT	14	10	856949001	NUT	10	22
859056	FLOAT	44	6	859065A3	TANK ASSEMBLY Fuel Fuel	44	1
859066A3	PICK UP ASSEMBLY Fuel	44	5	859072	GASKET Pick Up Body	44	4
859080	WASHER Fiber	44	8	859578A02	CAP ASSEMBLY Oil Filler	24	18
878311	CAP	4	20	878357	CABLE ASSEMBLY Ground To Rubber Cop	34	29
878369	DECAL Spark Plug	10	31	878388001	SCREW	6	13
881305005	GROMMET	36	14	892775	JOINT Cable	12	19
892779	BRACKET	6	30	895106	WASHER Stainless Steel	14	11
895106	WASHER Stainless Steel	22	5	895106	WASHER Stainless Steel Cylinder Head Cover	24	6
895106	WASHER Stainless Steel	28	7	895106	WASHER Stainless Steel	28	21
895106	WASHER Stainless Steel	30	8	895106	WASHER Stainless Steel	36	19
895106001	WASHER	30	18	895106001	WASHER	36	4
895106001	WASHER	38	36	895106002	WASHER	14	3
895108002	SLEEVE Protective	6	31	895108003	SLEEVE Protective	6	32
895108004	SLEEVE Protective	28	10	895110A05	CARBURETOR Upper	16	1
895110A06	CARBURETOR Center	16	28	895110A07	CARBURETOR Lower	16	29
895115001	BOOT Rubber	16	13	895116001	SPRING	16	5
895118	WASHER	18	11	895118001	WASHER	20	18
895118003	WASHER	18	8	895119001	PLATE	18	21
895120001	TIMING BELT	18	12	895121A02	HARNESS ASSEMBLY CD	6	16
895121A03	HARNESS ASSEMBLY CD	6	18	895122A01	CABLE ASSEMBLY	6	36
895131A03	CABLE ASSEMBLY Starter	10	23	895131A04	CABLE ASSEMBLY Throttle	28	9
895133001	COVER Belt	10	26	895136001	SCREW	16	6
895136002	BOLT Drain	36	6	895140002	BOLT	34	7
895140003	BOLT	28	13	895141	WASHER Stainless Steel	18	16
895141	WASHER Stainless Steel	28	14	895146	WASHER	36	7
895146001	WASHER	34	11	895146003	WASHER	34	9
895147001	COVER Idle Port	36	12	895148001	GASKET	36	13

PARTS INDEX

Part No.	Description	Pg.	Ref.no	Part No.	Description	Pg.	Ref.no
895149001	APRON	36	16	895150	GASKET	22	16
895151	PLUG Anode	22	17	895152001	STRAINER Oil	22	24
895153001	HOSE Rubber (220 mm)	22	22	895153002	HOSE Rubber	16	40
895153003	HOSE Rubber	16	34	895153004	HOSE Rubber	16	37
895153005	HOSE Rubber	16	33	895153006	HOSE Rubber	16	41
895153007	HOSE Rubber	16	42	895153008	HOSE Rubber	16	38
895154A04	GEAR HOUSING ASSEMBLY Complete	38	-	895154A04	GEAR HOUSING ASSEMBLY Complete Short	42	-
895154A05	GEAR HOUSING ASSEMBLY Complete	38	-	895154A05	GEAR HOUSING ASSEMBLY Complete Long	42	-
895168001	WASHER	34	19	895171001	HANDLE Co-Pilot	34	10
895172001	PLATE Co-Pilot	34	13	895173	DISC	34	8
895174001	COVER	4	24	895175002	GROMMET	4	25
895178001	SEAL Rubber	4	8	895188A05	POWERHEAD ASSEMBLY	18	-
895188A05	POWERHEAD ASSEMBLY	20	-	895188A05	POWERHEAD ASSEMBLY	22	-
895188A05	POWERHEAD ASSEMBLY	24	-	895188A05	POWERHEAD ASSEMBLY	26	-
895257005	PARTS MANUAL 25HP Seapro 4-Stroke International	2	-	895265	TENSIONER Belt	18	13
895266	COVER TENSIONER	18	14	895267	BRACKET Coil	6	6
895268	SENSOR Overheat	6	33	895763A05	DECAL SET	4	-
898101T25	CLAMP BRACKET Port, 14MM Thread	30	2	898101T26	CLAMP BRACKET Starboard, 14MM Thread	30	1
8M0007119	SEAL Drain Plug	48	-	8M0075255	SEAL Drain Plug	48	-
8M0079092	SEAL Oil	42	17	8M0088825	FUEL FILTER KIT	48	-
8M0119207	THERMOSTAT 60 Degrees	48	-	8M0120839	SERVICE KIT F25/30 Hp Standard (300 Hour)	48	-
8M0162831	FILTER ASSY OIL 4 STROKE	48	-	95218015	PIN Camshaft	18	2
95218016	PIN Spring	32	40	952188	PIN Dowel	38	24
952189	PIN Dowel	12	12	95220	GASKET	24	8
95220	GASKET	38	34	95229	KEY	18	6
95275002	PLATE	36	2	952868	COLLAR	6	27
952868	COLLAR	10	29	952868	COLLAR	14	19
95306	CLAMP	6	8	95306	CLAMP	14	7
95306	CLAMP	24	20	953181	E RING	4	5
953683	PLUG	24	7	953683	PLUG	38	33
95374	NUT Nylon	48	-	95374001	NUT Nylon	34	12
95374002	NUT	34	38	95379	PAD	30	13
953832	SPRING	32	43	953833	SPRING	30	26
953834	SPRING	30	22	953835	SPRING	30	22
95392014	WASHER	34	32	953921	WASHER Stainless Steel	4	4
953921	WASHER Stainless Steel	4	6	953921	WASHER Stainless Steel	4	35
953921	WASHER Stainless Steel	6	24	953921	WASHER Stainless Steel	10	21
953921	WASHER Stainless Steel	10	28	953921	WASHER Stainless Steel	12	8
953921	WASHER Stainless Steel	30	33	953921	WASHER Stainless Steel	30	36
953923	WASHER Rubber	6	25	953925	WASHER	12	20
953928	WASHER	34	37	95395	CLIP Stainless Steel	4	16
95395	CLIP Stainless Steel	14	23	953951	CLAMP	14	15
953951	CLAMP	16	43	96222	CLAMP BRACKET Starboard, Black, 1/2 Inch Thread	30	1
96232	CLAMP BRACKET Port, Black, 1/2 Inch Thread	30	2	NSS	NOT SOLD SEPARATE Decal-Oil Pressure	4	22
NSS	NOT SOLD SEPARATE Decal Storage	4	28	NSS	NOT SOLD SEPARATE Caution Lable B	10	32